DIGITAL LOCK-IN AMPLIFIER

LI 5645 / LI 5650

INSTRUCTION MANUAL
(REMOTE CONTROL)

NF Corporation

DA00054241-002

DIGITAL LOCK-IN AMPLIFIER

LI 5645 / LI 5650

INSTRUCTION MANUAL
(REMOTE CONTROL)

Trademarks

National Instruments are registered trademarks of National Instruments Corporation in the United States.

Other company names and product names used in this instruction manual may be trademarks or registered trademarks of their respective companies.

Preface

This instruction manual explains procedures remotely controlling the LI5645 / LI5650.

■ The LI 5645 / LI 5650 are provided with the following instruction manuals.

- LI5645 / LI5650 Instruction Manual (Operations)

  Explains procedures for operating the LI5645 / LI5650 from the panel, maintaining it, and other basic information.

- LI5645 / LI5650 Instruction Manual (Remote Control)

  This instruction manual explains procedures for using the LI 5645 / LI 5650 by remote control.

LI5645 / LI5650 Instruction Manual (Remote Control) is included on the provided CD-ROM.

A sample program for controlling the LI5645 / LI5650 is included on the provided CD-ROM. Also included are representative programming languages, and examples of combinations of the GPIB, USB, RS-232, and LAN interfaces. For details, see the instructions provided with the included CD-ROM.

■ This instruction manual has the following chapter organization.

1. Preparation Before Use
   Explains interface settings and precautions.
2. Switching between remote / local states
   Explains how to switch between remote operation and local operation.
3. Responses to interface messages
   Shows responses to principle IEEE-488.1 interface messages.
4. Command list and command tree
   Provides outlines of all commands.
5. Command explanation
   Explains details of individual commands.
6. Status system
   Explains the status system.
7. Trigger system
   Outlines the trigger system.
8. Data acquisition using the measurement data buffers
   Provides procedures for measurement sing the measurement data buffer.
9. Error Messages
   Explains error messages related to remote control.
10. Embedded Web Site
    Explains the embedded web site.

Table of Contents

Page

1. Preparation Before Use 1
   1.1 Remote control interface selection 2
   1.2 USB outline 3
      1.2.1 Controller preparation 3
      1.2.2 LI5645 / LI5650 preparation 4
      1.2.3 Identification of USB devices 4
   1.3 RS-232 outline 6
      1.3.1 Controller preparation 6
      1.3.2 LI5645 / LI5650 preparation 6
      1.3.3 Connection 9
      1.3.4 Limitations and precautions 10
   1.4 GPIB outline 11
      1.4.1 Controller preparation 11
      1.4.2 LI5645 / LI5650 preparation 11
      1.4.3 Precautions regarding GPIB use 12
      1.4.4 Basic GPIB specifications 12
   1.5 LAN outline 13
      1.5.1 Controller preparation 13
      1.5.2 LI5645 / LI5650 preparation 13
      1.5.3 Connection 18
      1.5.4 Limitations and precautions 18
      1.5.5 Embedded web site 18
   1.6 Precautions regarding communication 19
2. Switching between remote / local states 21
3. Responses to interface messages 23
4. Command list and command tree 25
5. Command explanation 35
   5.1 Language outline 36
      5.1.1 Subsystem commands 36
      5.1.2 Path separator 36
      5.1.3 Abbreviation of keywords 37
      5.1.4 Optional keywords 37
   5.2 Sequential commands 37
   5.3 Detailed command explanations 38
      5.3.1 Common commands 40
      5.3.2 Subsystem commands 44
6. Status system 99
   6.1 Status system outline 100
   6.2 Status Byte 101
   6.3 Standard Event status 102
   6.4 Operation status 104
   6.5 Questionable Status 107
7. Trigger system 111
8. Data acquisition using the measurement data buffers 115
9. Error Messages 119
10. Embedded Web Site 123
   10.1 Preparation 124
   10.2 Requirements 124
   10.3 How to access web pages 124

10.4 About web pages 125
10.4.1 Navigation Menu 125
10.4.2 Descriptions of Menu 125
10.4.3 Welcome Page 126
10.4.4 Remote Control 127
10.4.5 Logging 128
10.4.6 LAN Configuration 129
10.4.7 Security 131
10.4.8 Update 131
10.4.9 Glossary 131

Figures and Tables

Page

Fig. 1-1 RS-232 connection cable wiring diagram 9
Fig. 6-1 Status system 100
Fig. 6-2 Standard Event status structure 102
Fig. 6-3 Operation Status structure 104
Fig. 6-4 Questionable Status structure 107
Fig. 7-1 Trigger system 112
Fig. 10-1 Navigation Menu 125
Fig. 10-2 Identification dialogue 126
Fig. 10-3 Control Panel 127
Fig. 10-4 Logging 128
Fig. 10-5 Authentication Dialogue 131

Table 3-1 Responses to interface messages 24
Table 4-1 Common command list 26
Table 4-2 Subsystem command list 27
Table 6-1 Status Byte register definition 101
Table 6-2 Content of the Standard Event Status register. 102
Table 6-3 Operation Condition register, Event register content 105
Table 6-4 Operation Transition Filter and Event register transition 106
Table 6-5 Questionable Condition register, Event register content 108
Table 6-6 Questionable Transition Filter and Event register transition 109
Table 9-1 Error messages 120
Table 10-1 Menu Icons 125
Table 10-2 List of Parameters at Welcome Page 126
Table 10-3 List of the Buttons at Logging Page 128
Table 10-4 List of the Parameters at LAN Configuration 129

1. Preparation Before Use

The LI5645 / LI5650 can be used for remote control by USB, RS-232, GPIB, or LAN.
By sending program messages and receiving response messages pertaining to measurement values and settings, the controller provides control identical to panel operation.
The interface connectors are located on the back panel of the LI5645 / LI5650.

1.1 Remote control interface selection

The LI5645 / LI5650 remote control interface is used by selecting one of the USB, RS-232, GPIB, and LAN interfaces. Multiple interfaces cannot be used simultaneously.

■ {Utility screen}

First press the [UTIL] key to display the utility screen.

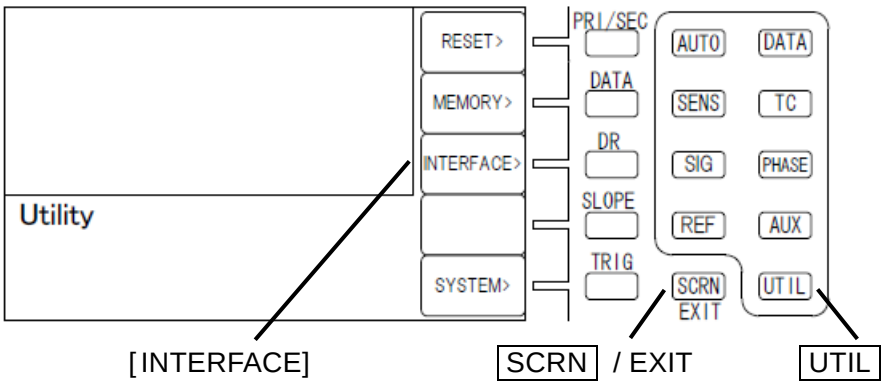

[INTERFACE] Switches to the {interface configuration screen}.

In this instruction manual, square brackets ([ ]) are used to indicate soft keys during panel operation, or to show keyword that can be omitted when sending commands.

■ {Interface configuration screen}

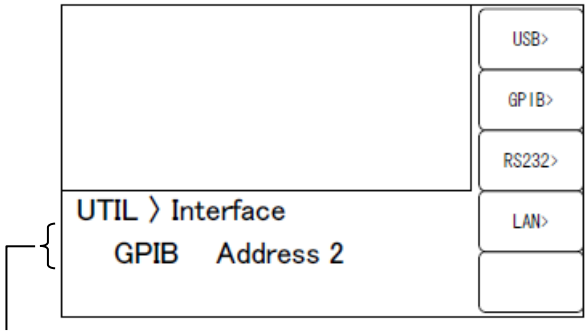

Main settings of selected interface Remote:GPIB, Address 2

[USB>] Selects USB and switches to the {USB information screen}.

[GPIB>] Selects GPIB and switches to the {GPIB configuration screen}.

[RS232>] Selects RS-232 and switches to the {RS-232 configuration screen}.

[LAN>] Selects LAN and switches to the {LAN configuration screen}.

[SCRN] / EXIT Returns display to the {Other operation screen}. (Returns to the utility screen)

1.2 USB outline

1.2.1 Controller preparation

When using the USB interface, make sure that the controller (controlling computer) is equipped with a USB interface.

Install the USBTMC driver on the controller. Ordinarily, this driver supports the USB488 subclass, and makes practically the same control provided by GPIB with USB.

USBTMC: Universal Serial Bus Test and Measurement Class

This driver is included in all hardware and software products of companies that provide the VISA library. Users who do not have a VISA library license will need to obtain one separately.

VISA: Virtual Instrument Software Architecture

Examples of companies that provide the VISA library (no particular order, information current as of creation of this document)

National Instruments Corporation

Keysight Technologies, Inc.

Tektronix, Inc.

Using the VISA library, operation can be unified with any of USB, RS-232, GPIB, LAN to the extent of the supports.

1.2.2 LI5645 / LI5650 preparation

■ {Interface configuration screen}

When USB is selected, the following information is displayed.

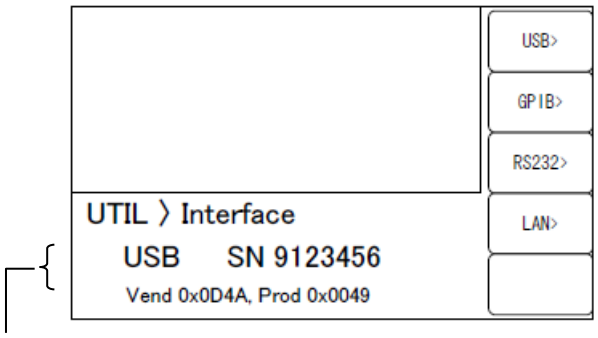

Serial number/vendor ID, product ID (For details ☞ See below)

[USB>] Switches to the {USB information screen}.

■ {USB information screen}

SN	Serial Number＝9123456 (example): 7-digit serial number unique to each device.
Vend	Vendor ID＝0x0D4A (hexadecimal notation): Number indicating NF corporation. In decimal notation, this is 3402.
Prod	Product ID＝0x0050 (hexadecimal notation): Product number of the LI5645. In decimal notation, this is 80. Product ID＝0x004F (hexadecimal notation): Product number of the LI5650. In decimal notation, this is 79
[Exec]	USB is selected as the communication interface and display returns to the immediately preceding screen.

1.2.3 Identification of USB devices

Connect the LI5645 / LI5650 to a USB connector on the computer using an off-the-shelf USB cable. Proper operation may not result if connection is made via a USB hub.

When the LI5645 / LI5650 is connected by USB to a computer with a USBTMC-class driver installed, the LI5645 / LI5650 is recognized automatically. The LI5645 / LI5650 installed in a system are identified by the Vendor ID, Product ID, and Serial Number that are displayed in the {USB information

screen}. If the device is not recognized automatically, recognition can be achieved by entering these values directly.

1.3 RS-232 outline

1.3.1 Controller preparation

When using the RS-232 interface, make sure that the controller (controlling computer) is equipped with a serial communication (RS-232) connector.

Make the same settings for the following parameters on both the LI5645 / LI5650 and the controller.

- Communication speed 4800 to 230400 bps
- Data length 8 bits (*1)
- Stop bit length 1 during transmission, 1 during reception (*1)
- Parity None (*1)
- Flow control None / Software / Hardware
- Terminator LF / CR LF

*1: Fixed on the LI5645 / LI5650. Cannot be altered.

1.3.2 LI5645 / LI5650 preparation

■ {Interface configuration screen}

When RS-232 is selected, the following information is displayed.

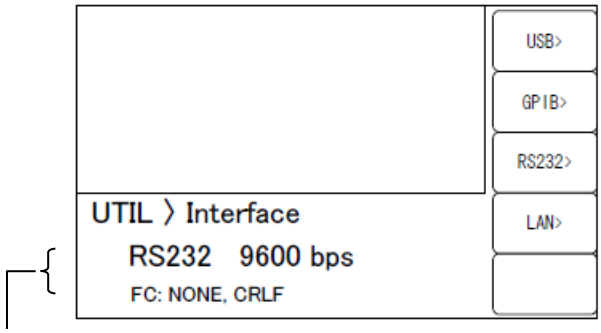

Current settings: Data rate/flow control, terminator

[RS232>] Switches to the {RS-232 configuration screen}.

■ {RS-232 configuration screen}

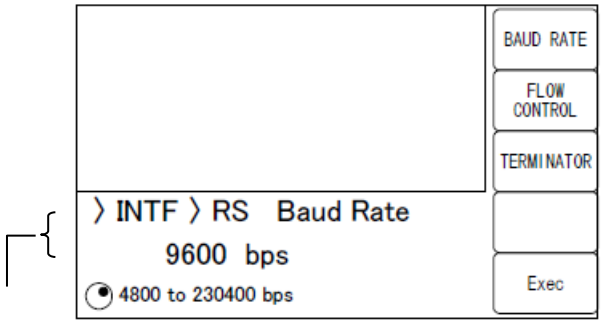

Current settings: Data rate/selectable range

[BAUD RATE] Switches to the {Baud rate configuration screen}.

[FLOW CONTROL]
Switches to the {Flow control configuration screen}.

[TERMINATOR] Switches to the {Terminator configuration screen}.

[Exec] Saves settings and returns display to the {Interface configuration screen}
RS-232 is selected as the communication interface.

SCRN / EXIT Returns display to the {Interface configuration screen}.

■ {Baud rate configuration screen}

Sets the baud rate (communication speed). The baud rate is the same for both transmission and reception.

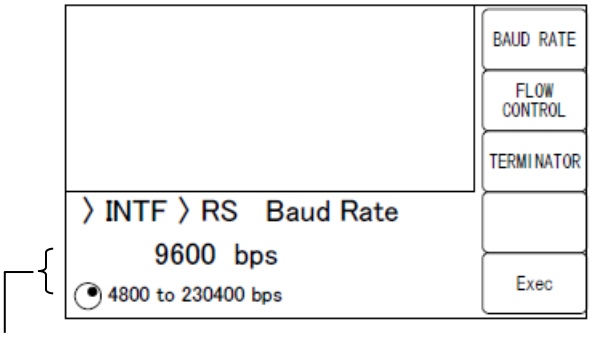

Current settings / Selectable range
Selection from among the following is possible using the up/down keys or the modify knob.
4800, 9600, 19200, 38400, 57600, 115200, 230400 bps

[BAUD RATE], [FLOW CONTROL], [TERMINATOR]
These switch display to the respective configuration screens.

At communication speeds greater than 19200 bps, a short and low-capacitance cable must be used.

■ {Flow control configuration screen}

Configures flow control.

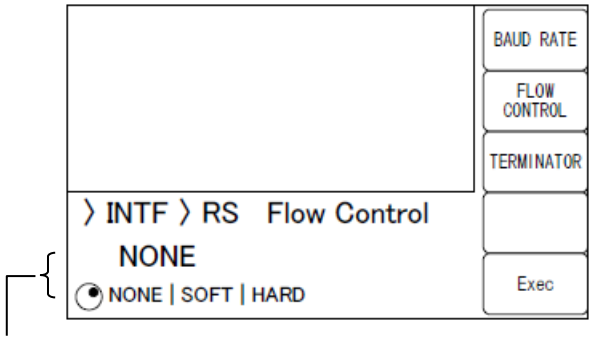

Current settings / Selectable range
Selection from among the following is possible using the up/down keys or the modify knob.

NONE No flow control (the default setting)

SOFT Software flow control

Communication is managed using control codes (X-ON and X-OFF). Reliable communication can be achieved using a connection cable with just TxD, RxD, and GND lines. However, transfer of binary data is not possible. Further, effective communication speed may be reduced. In hexadecimal notation, X-ON is 11, and X-OFF is 13.

HARD Hardware flow control
Communication is managed using hardware flow control (RTS and CTS).

[BAUD RATE], [FLOW CONTROL], [TERMINATOR]
These switch display to the respective configuration screens.

When flow control is enabled, transmission is suspended when the receive buffer approaches capacity, then restarts when the receive buffer opens up.

■ {Terminator configuration screen}

A message terminator is required at the end of each set of commands or responses to signify termination.

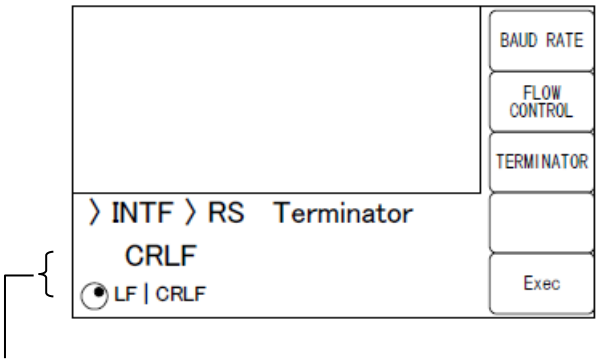

Current settings / Selectable range
Selection from among the following is possible using the up/down keys or the modify knob.

LF Configures the terminator as a single LF (Line Feed) character.

CRLF Configures the terminator as the 2 characters CR (Carriage Return) and LF. In hexadecimal notation, CR is 0x0D and LF is 0x0A.

[BAUD RATE], [FLOW CONTROL], [TERMINATOR]
These switch display to the respective configuration screens.

- During LI5645 / LI5650 transmission,
  the selected terminator is added to the end of response messages.
- During LI5645 / LI5650 reception,
  When the terminator that has been set for the LI5645 / LI5650 is received, the command is executed.

After completing configuration, save the settings with [Exec] to select RS-232 as the communication interface and return display to the {Interface configuration screen}.

1.3.3 Connection

For connection, use an off-the-shelf connection cable, which must be purchased separately. When making connection to a serial interface on a personal computer, use the following type of cable.

Cable specifications: D-Sub, 9-pin, female-female, interlink cable using inch-standard screw.
In order to avoid misoperation due to radiation and interference resulting from electromagnetic noise, be sure to use a shielded cable.

Communication can be established if at least the three lines RxD, TxD, and GND are connected.

The RTS and CTS lines are required in order to use hardware flow control.

An interlink cable is required in order to use hardware flow control (Fig. 1-1(b)). Some cables have cross or reversed lines in which pins 7 and 8 are connected together (Fig. 1-1(c)). Communication is also possible with this type of cable, but hardware flow control is not possible.

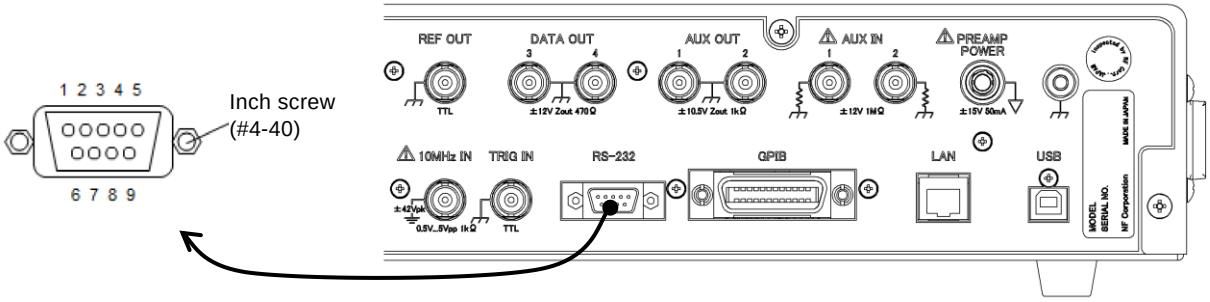

(a) Rear panel RS-232 connector

LI5645 / LI5650	
Signal	Pin no.
—	1
RxD	2
TxD	3
DTR	4
GND	5
—	6
RTS	7
CTS	8
—	9
	Frame

Personal computer (PC/AT, etc.)	
Pin no.	Signal
1	—
2	RxD
3	TxD
4	DTR
5	GND
6	—
7	RTS
8	CTS
9	—
Frame	

(b) Interlink connection

1	1
2	2
3	3
4	4
5	5
6	6
7	7
8	8
9	9

(c) Other cross connections

Fig. 1-1 RS-232 connection cable wiring diagram

1.3.4 Limitations and precautions

- RS-232 only allows the controller to be connected in a 1-to-1 configuration.
  It is not possible to connect multiple devices in parallel to a single port.

- Functions such as SRQ and Device Clear that are unique to GPIB cannot be used.
  The BREAK signal or Control-C (0x03 in hexadecimal notation) can be used as an alternate to the Device Clear function. However, Control-C cannot be used during binary transfer.
  The :SYSTem{:LOCal|:REMote|:RWLock} command can largely substitute for the remote local function. The :SYSTem:KLOCk can be used to lock operation from the panel.

- Clear the receive buffer before starting communication.
  If device power is turned on or off, or the RS-232 cable is connected or disconnected while the controller has the RS-232 communication path open, abnormal data may enter the controller's receive buffer. Therefore, before starting normal operation, the program on the controller should clear the controller's receive buffer (e.g., by initializing communication) upon starting or restarting communication.
  In the same way, abnormal data can be left in the receive buffer of the LI5645 / LI5650. Clear the receive buffer using the BREAK signal or other equivalent of Device Clear.

1.4 GPIB outline

This interface is provided for use in environments that are well-suited to use of GPIB. It should not be used in environments that are exposed to high levels of electromagnetic noise.

1.4.1 Controller preparation

Install an off-the-shelf GPIB interface card in the controller (the controlling computer) and connect the LI5645 / LI5650 using a GPIB cable. See the manual included with the GPIB interface regarding GPIB driver software.

1.4.2 LI5645 / LI5650 preparation

With GPIB, devices included in the system are identified by device-specific addresses. Set different GPIB addresses for each device.

■ {Interface configuration screen}

When GPIB is selected, the following information is displayed.

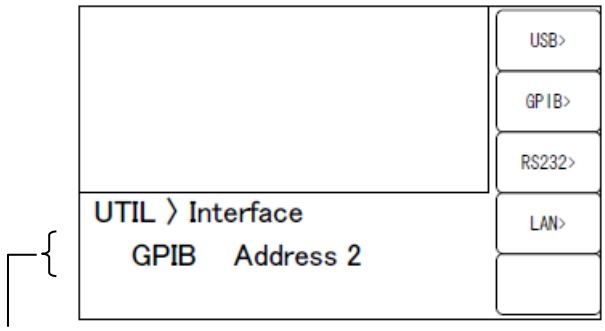

Current setting: GPIB address

[GPIB>] Switches to the {GPIB configuration screen}.

■ {GPIB configuration screen}

Only the address can be set.

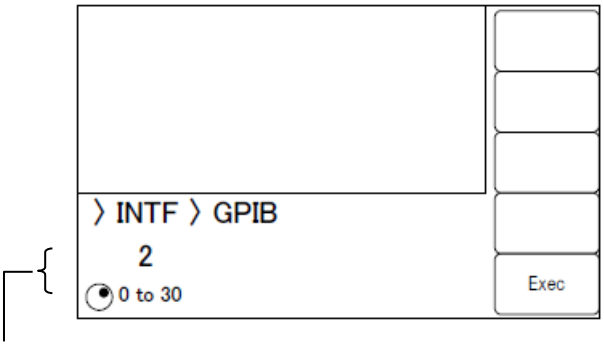

Current settings / Settable range

Select the GPIB address using the up/down keys or the modify knob.

[Exec] Saves the configuration, sets the communication interface to GPIB, and returns display to the {Interface configuration screen}.

■ Message terminator

A terminator is required at the end of each set of commands or responses to signify termination.

The response message terminator sent by the LI5645 / LI5650 is fixed to LF^EOI.

Any of the following can be used as program message terminators that are received by the LI5645 / LI5650.

- LF Line Feed code
- LF^EOI EOI (END message) accompanying LF
- (Last code)^EOI EOI (End message) appended to the last code

1.4.3 Precautions regarding GPIB use

- Before connecting or disconnecting the GPIB connector, turn off power to all devices connected to the bus.
- When using GPIB, turn on power to all divices connected to the bus.
- With GPIB, the maximum number of devices that can be connected to the same bus is 15, including the controller.

  Further, length of the cable is subject to the following restrictions.
  - Total cable length ≦ (2 m×number of devices or 20m, whichever is shorter)
  - Length of any single cable ≦ 4 m
- Set different GPIB addresses for each device. Output collisions arising when multiple devices with the same address are connected to the same bus can result in device damage.

1.4.4 Basic GPIB specifications

■ GPIB conforming standards

IEEE std 488.1-1987, IEEE std 488.2-1992

■ IEEE std 488.1-1987 interface functions

SH1	Complete send flow source handshake function
AH1	Complete receive accepter handshake function
T6	Basic Talker, Serial Pole, and talker cancel function by listener-addressed privided No Talk-Only function
L4	Basic Listener function, function to cancel the listener by talker-addressed provided No Listen-Only function
SR1	Complete Service Request function
RL1	Complete Remote-Local function
PP0	No Parallel Poll function
DC1	Complete Device Clear function
DT1	Complete Device Trigger function
C0	No Controller function
E1	Open collector drive

1.5 LAN outline

1.5.1 Controller preparation

When using the LAN interface, make sure that the controller (controlling computer) is equipped with a LAN interface. The LI5645 / LI5650 supports communication using TCP/IP protocol.

1.5.2 LI5645 / LI5650 preparation

■ {Interface configuration screen}

When LAN is selected, the following information is displayed.

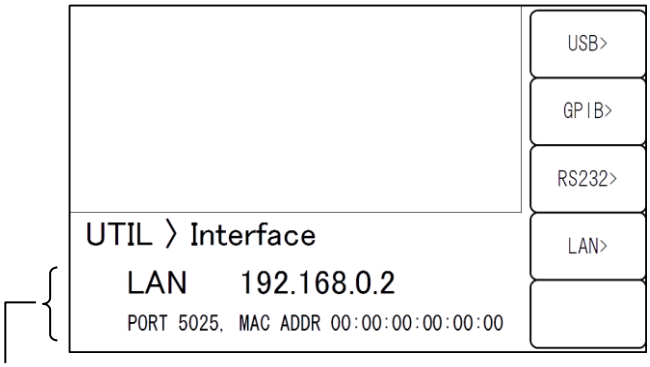

Current main settings: IP address / port number / MAC Address

[LAN>] Switches to the {LAN configuration screen}.

■ {LAN configuration screen}

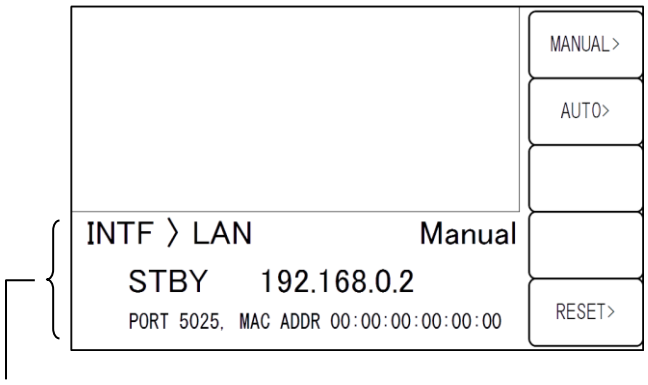

Current statuses: LAN status / IP address / IP configuration method (manual or auto)

STBY	Indicates any other interface has selected or waiting for LAN interface to start.
NFLT	Indicates the LAN interface is ready and possible to communicate.
FLT	Indicates the LAN interface is not possible to communicate. The following are the reasons : - Network cable is disconneced. - Failure to obtain an IP address via DHCP server.

- Detection of a duplicate IP address.

[MANUAL>]	Switches to the {Address Manual Setting screen}.
[AUTO>]	Switches to the {Address Auto Setting screen}.
[RESET>]	Switches to the {LAN Reset screen}.
SCRN / EXIT	SwitchesReturns display to the {Interface configuration screen}.

■ {Address Manual Setting screen}

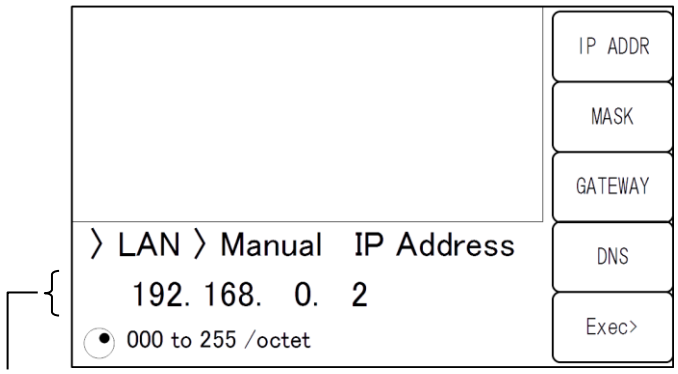

Current setting: IP address

[IP ADDR]	Switches to the {IP address configuration screen}.
[MASK]	Switches to the {Subnet mask configuration screen}.
[GATEWAY]	Switches to the {Default gateway configuration screen}.
[DNS]	Switches to the {DNS configuration screen}.
[Exec]	Saves the configuration, sets the communication interface to LAN, and returns display to the {LAN configuration screen}.
SCRN / EXIT	Returns display to the {Interface configuration screen}.

■ {IP address configuration screen}

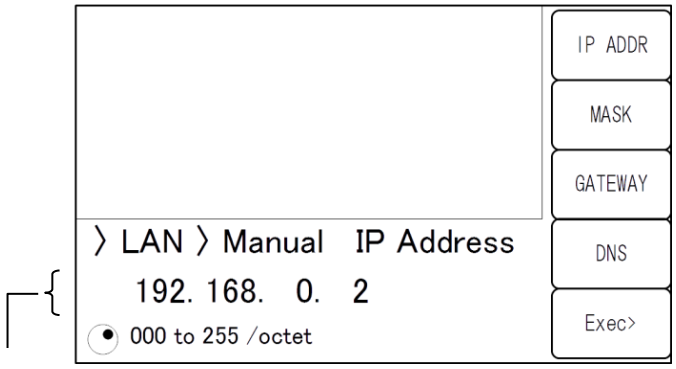

Current settings / settable range

Set individual octets (8 bits) as decimal numbers.

Use the cursor keys or modifier knob.

[IP ADDR], [MASK], [GATEWAY], [DNS]

These switches display to the respective configuration screens.

Set the address (logical address) that identifies the device which under the Internet Protocol (IP). Addresses in the range 192.168.0.0 to 192.168.255.255 are private IP addresses available for free assignment in small-scale local networks (Class C).

■ {Subnet mask configuration screen}

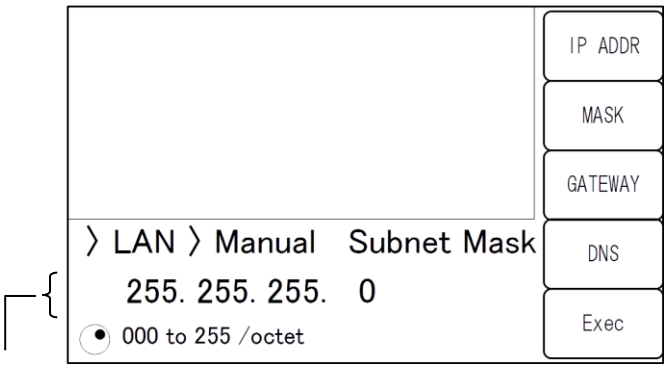

Current settings / settable range

Set individual octets (8 bits) as decimal numbers.

[IP ADDR], [MASK], [GATEWAY], [DNS]

These switches display to the respective configuration screens.

Set a mask that separates upper IP network addresses from lower IP host addresses

■ {Default gateway configuration screen}

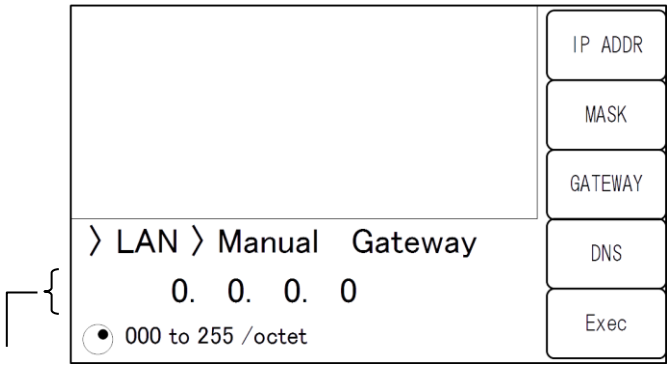

Current settings / settable range

Set individual octets (8 bits) as decimal numbers.

[IP ADDR], [MASK], [GATEWAY], [DNS]

These switches display to the respective configuration screens.

Set the IP address of the gateway to be used implicitly when accessing an external network.

■ {DNS configuraion screen}

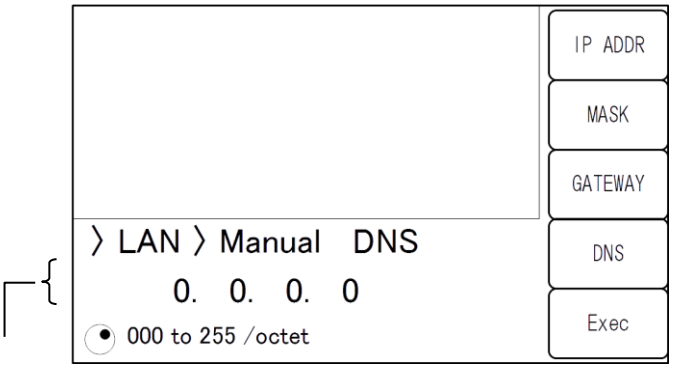

Current settings / settable range

Set individual octets (8 bits) as decimal numbers.

[IP ADDR], [MASK], [GATEWAY], [DNS]

These switches display to the respective configuration screens.

Set the IP address of the DNS (Domain Name Server) to be used to resolve a host name to an IP address.

After completing configuration, save the settings with [Exec] to select LAN as the communication interface and return display to the {Interface configuration screen}.

■ {Address Auto Setting screen}　(Firmware version 1.50 or later)

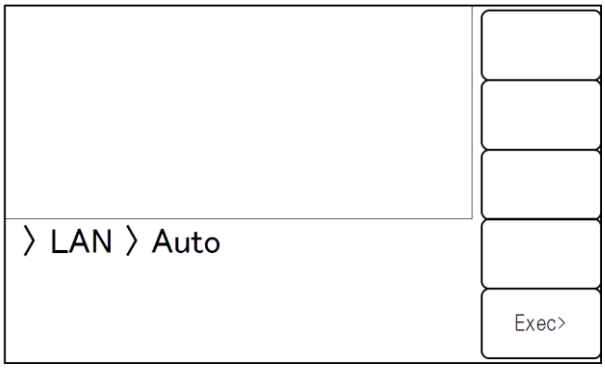

[Exec]　Saves the configuration, sets the communication interface to LAN, and returns display to the {LAN configuration screen}.

SCRN / EXIT　Returns display to the {Interface configuration screen}.

When the IP auto configuration is selected and executed, this device request to obtain an IP adrerss to a DHPC server. If the device objtains a valid IP address from a DHCP server, it is possible to communicate.

However, If the device does not obtain a valid IP address, the device will assign a link-local address that is defined in the address block 169.254.0.0/16 by using APIPA (Automatic Private IP Addressing).

■ {LAN Reset screen}　(Firmware version 1.50 or later)

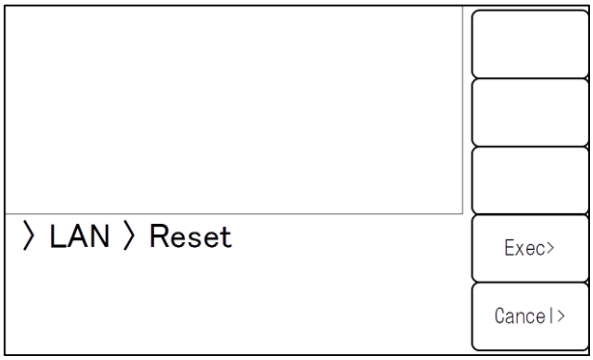

[Exec]　Resets LAN settings and returns display to the {LAN configuration screen}. If the LAN setting reset is completed, the device start communication with the IP auto configuration.

[Cancel]　Cancels resetting LAN settings and returns display to the {LAN configuration screen}.

SCRN / EXIT　Returns display to the {LAN configuration screen}.

1.5.3 Connection

Use a straight cable when connecting the LI5645 / LI5650 to the network.

When connecting directly to a personal computer, use a cross cable.

However, if the device connected automatically discriminates between straight and cross connection, either type of cable may be used.

1.5.4 Limitations and precautions

- Functions such as SRQ and Device Clear that are unique to GPIB cannot be used.
  Control-C (03H in hexadecimal notation) can be used as an alternate to the Device Clear function. However, Control-C cannot be used during binary transfer.
  The :SYSTem{:LOCal|:REMote|:RWLock} command can substitute for the Remote Local function.

1.5.5 Embedded web site

When the firmware version 1.50 or later and the LAN interface is enabled, you can access the built-in web site. Please refer to Chapter "10. Embedded Web Site" for details on the web site.

1.6 Precautions regarding communication

■ Input buffer

- Commands received are placed in a buffer and interpreted and executed in the order received
  The size of the input buffer is 100K bytes (1K=1024). Program messages exceeding this size are interpreted and executed in the order received.
- If an disallowed command is discovered during interpretation, an error occurs upon execution and subsequent commands are not executed until the program message terminator is received.

■ Output buffer

- The capacity of the output buffer is 100K bytes (1K=1024).
- If the maximum capacity is exceeded, the output buffer is cleared and the Standard Event Status register's query error bit is set to 1. Interpretation and execution of subsequent commands may continue as normal, but all response messages generated are discarded until the program message terminator is reached.
- A separate 4M bytes of memory is provided for use as measurement data buffer.

■ Error queue

- The maximum number of error messages that can be queued is 16.
- If this number is exceeded, the 16th message changes to "Queue overflow" to indicate that the error queue has overflowed. Subsequent error messages are discarded. The 15 error messages already in the queue are maintained.

■ Program message terminator

When sending commands from the controller, append LF (Line Feed, 0x0A hex) to the end of the output character string as the program message terminator. Further, append EOI (End message) as the last byte. Some devices may not operate properly unless LF and EOI are appended to commands sent. Depending on the driver software used as the control computer, unless program message terminators are specified together with commands themselves, program message terminators may not be output. Although NL (New Line) is sometimes indicated instead of LF (Line Feed), the binary code is the same.

Since the concept of END messages do not apply in case of RS-232 and LAN, EOI is not appended.

■ Restrictions applicable to RS-232 and LAN

Functions that are unique to GPIB cannot be used. Examples are shown below.

Reception of Device Clear (DCL, SDC) messages
Reception of GTL (Go To Local) messages
Reception of LLO (Local Lockout) messages
Reception of GET (Group Execute Trigger) messages
Reception of REN (Remote Enable) messages
Transmission of SRQ (Service Request) messages
Serial Poll (reception of SPE / SPD and transmission of status bytes)
Transmission of END message (the EOI signal as message terminator)

2. Switching between remote / local states

In regard to remote control, the LI5645 / LI5650 has a remote states and a local state.
In the local state, all panel operations are possible.
In the remote state, all panel operations are disabled except for the TRIG key and the operation that returns operation to the local state.

■ Switching to the remote state

Ordinarily, the remote state is used during operation through GPIB. This depends on driver functionality on the controller side. Under the communication standard, specifying a device as the listener when the REN message is TRUE puts that device in the remote state. The same applies to operation with USB (USBTMC).

■ Switching to the local state

Operation can be returned to the local state from the remote state by pressing the CLR / LOCAL key on the front panel (except during Local Lockout).
Operation can be returned to the local state from the controller by sending the GTL command or returning the REN line to FALSE. Since disconnecting the GPIB cable makes the REN line FALSE, operation returns to the local state.

■ Prohibiting local operation from the panel

Accidental local operation can be prevented by specifying Local Lockout from the controller, During Local Lockout, operation cannot be returned to the local state by pressing the CLR / LOCAL key.
From the controller, operation to return to the local state is possible from the controller even during Local Lockout.

■ Remote/local operation with RS-232 and LAN

When a command is sent to the LI5645 / LI5650, the LI5645 / LI5650 returns to the remote state.
When the local state is restored by pressing the CLR / LOCAL key, panel operation is enabled.
The following commands can be used with RS-232 or LAN.

:SYSTem:LOCal (switches to the local state)

:SYSTem:REMote (switches operation to the remote state)

:SYSTem:RWLock (switches to the remote state with Local Lockout)

REMOTE lamp

In the remote state, the REMOTE lamp lights, and in the Local Lockout state, it flashes (at a slow rate).
After the power is turned on, remote control cannot be used while the REMOTE lamp is flashing (at a high rate).

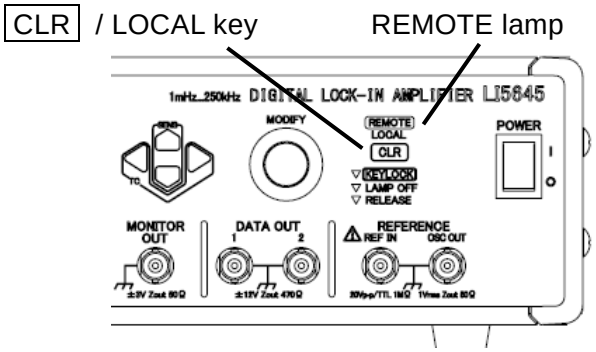

3. Responses to interface messages

The principle IEEE-488.1 interface messages are as follows.

Table 3-1 Responses to interface messages

Message	Function
IFC	< InterFace Clear > Initializes the GPIB interface. Releases the specified listener and talker.
DCL, SDC	< Device CLear >, < Selected Device Clear > Clears the input buffer and cancels command interpretation / execution. Clears the output buffer and clears bit 4 (MAV) of the Status Byte register.
LLO	< Local Lockout > Prohibits switching from the remote state to the local state by pressing the CLR / LOCAL key.
GTL	< Go To Local > Switches to the local state.
GET	< Group Execute Trigger > Executes a trigger. Works the same as the *TRG command.

The procedure for sending interface messages from the controller varies according to device driver. For details, see the relevant driver manual.

These functions cannot be used with RS-232 and LAN. However, alternate functions are provided for some of them.

4. Command list and command tree

The LI5645 / LI5650 commands can broadly be grouped into common commands as defined in IEEE488.2, and subsystem commands corresponding to device-specific functions.

Common commands supported by the LI5645 / LI5650 are listed in Table 4-1.
The LI5645 / LI5650 subsystem commands are listed in Table 4-2.
Symbols used in Tables 4-1 and 4-2 have the following meanings.

- Square brackets ([ ]) indicate optional keywords.
- A vertical bar (|) indicates that you should select one keyword from among a set of keywords.
- Lowercase characters in keywords indicates that those characters are optional.

Table 4-1 Common command list

Com-mand	Name	Function
*CLS	Clear Status Command	Clears the status.
*ESE *ESE?	Standard Event Status Enable Command / Query	Sets/queries the Standard Event Status Enable register.
*ESR?	Standard Event Status Register Query	Queries the Standard Event Status register.
*IDN?	Identification Query	Queries the device identification information (such as model name).
*OPC *OPC?	Operation Complete Command / Query	Specifies that the OPC bit of the Standard Event Status register be set to 1 when all command processing has been completed. When all processing has been completed, 1 is returned in response to a query.
*RCL	Recall Command	Restores the contents of the specified configuration memory.
*RST	Reset Command	Resets the device and restores settings to default values.
*SAV	Save Command	Saves current settings to the specified configuration memory.
*SRE *SRE?	Service Request Enable Command / Query	Sets and queries the Service Request Enable register.
*STB?	Read Status Byte Query	Queries the status byte.
*TRG	Trigger Command	While awaiting a trigger when the trigger source is BUS, measurement data is recorded in the measurement data buffer when a trigger event occurs.
*TST?	Self-Test Query	Always returns 0.
*WAI	Wait-to-Continue Command	Postpones execution of ensuing commands until execution of all commands has been completed.

Table 4-2 Subsystem command list

Command	Function / operational target
ABORt subsystem	
:ABORt	Abort recording of measurement data
CALCulate1 subsystem	
:CALCulate1:FORMat	DATA1 output parameter selection
:CALCulate1:MATH:CURRent[:LEVel] (*1)	Normalize calculation reference value (current)
:CALCulate1:MATH:EXPRession:NAME	Normalize calculation format selection
:CALCulate1:MATH:VOLTage[:LEVel]	Normalize calculation reference value (voltage)
:CALCulate1:MULTiplier	X, R EXPAND multiplier (primary PSD)
:CALCulate1:OFFSet	X offset amount (primary PSD)
:CALCulate1:OFFSet:AUTO:ONCE	X, Y auto offset cancel (primary PSD)
:CALCulate1:OFFSet:STATe	X offset enable (primary PSD)
CALCulate2 subsystem	
:CALCulate2:FORMat	DATA2 output parameter selection
:CALCulate2:MULTiplier	Y EXPAND multiplier (primary PSD)
:CALCulate2:OFFSet	Y offset amount (primary PSD)
:CALCulate2:OFFSet:AUTO:ONCE	X, Y auto offset cancel (primary PSD)
:CALCulate2:OFFSet:STATe	Y offset enable (primary PSD)
CALCulate3 subsystem	
:CALCulate3:FORMat	DATA3 output parameter selection
:CALCulate3:MULTiplier (*1)	X, R EXPAND multiplier (secondary PSD)
:CALCulate3:OFFSet (*1)	X offset amount (secondary PSD)
:CALCulate3:OFFSet:AUTO:ONCE (*1)	X, Y auto offset cancel (secondary PSD)
:CALCulate3:OFFSet:STATe (*1)	X offset enable (secondary PSD)
CALCulate4 subsystem	
:CALCulate4:FORMat	DATA4 output parameter selection
:CALCulate4:MULTiplier (*1)	Y EXPAND multiplier (secondary PSD)
:CALCulate4:OFFSet (*1)	Y offset amount (secondary PSD)
:CALCulate4:OFFSet:AUTO:ONCE (*1)	X, Y auto offset cancel (secondary PSD)
:CALCulate4:OFFSet:STATe (*1)	Y offset enable (secondary PSD)
CALCulate5 subsystem	
:CALCulate5:MATH	Calculation method selection
:CALCulate5:MATH:EXPRession:NAME (*1)	Ratio mode calculation format
:CALCulate5:MULTiplier	Ratio multiplier

Table 4-2 Subsystem command list

Command	Function / operational target
DATA subsystem	
:DATA:COUNt?	Queries measurement data buffer data count
:DATA:DATA?	Queries measurement data buffer data content
:DATA:DELete	Clear measurement data buffer
:DATA:DELete:ALL	Clear all measurement data buffers
:DATA:FEED	Select data to be recorded in measurement data buffer
:DATA:FEED:CONTrol	Enable measurement data buffer recording
:DATA:POINts	Specify buffer size and initialize measurement data buffer
:DATA:TIMer	Internal timer time interval
:DATA:TIMer:STATe	Enable internal timer
DISPlay subsystem	
:DISPlay[:MENU][:NAME]	Select measurement screen
:DISPlay:WINDow[:STATe]	Display enable (on/off)
FETCh subsystem	
:FETCh?	Queries latest measurement data
FORMat subsystem	
:FORMat[:DATA]	Measurement data transfer format
INITiate subsystem	
:INITiate[:IMMediate]	Start trigger system
INPut[1] subsystem	
:INPut[1]:COUPling	Select signal input coupling
:INPut[1]:FILTer:NOTCh1:FREQuency	Power supply frequency (notch filter)
:INPut[1]:FILTer:NOTCh1[:STATe]	Enable fundamental wave removal
:INPut[1]:FILTer:NOTCh2[:STATe]	Enable second harmonic removal
:INPut[1]:GAIN (*1)	Current-voltage conversion gain
:INPut[1]:LOW	Enable signal input connector grounding
:INPut[1]:OFFSet:AUTO	PSD input offset auto adjust active
:INPut[1]:OFFSet:AUTO:ONCE	Auto-adjust PSD input offset just once
:INPut[1]:OFFSet:RST	Disable PSD input offset adjustment
:INPut[1]:OFFSet:STIMe	Continuous auto adjustment response time
INPut2 subsystem	
:INPut2:TYPE	Reference signal input format selection
MEMory subsystem	
:MEMory:STATe:DELete	Clear configuration memory
:MEMory:STATe:DEFine	Assign name to configuration memory
OUTPut[1] subsystem	
:OUTPut[1][:STATe]	Enable DATA1 output
OUTPut2 subsystem	
:OUTPut2[:STATe]	Enable DATA2 output
OUTPut3 subsystem	
:OUTPut3[:STATe]	Enable DATA3 output
OUTPut4 subsystem	
:OUTPut4[:STATe]	Enable DATA4 output

Table 4-2 Subsystem command list

3/4

Command	Function / operational target
ROUTe[1] subsystem	
:ROUTe[1][:TERMinals]	Signal input connector selection
ROUTe2 subsystem	
:ROUTe2[:TERMinals]	Reference source selection
SENSe subsystem	
[:SENSe]:AUTO:ONCE	Automatic setting
[:SENSe]:CURRent[1]:AC:RANGe:AUTO (*1)	Auto current sensitivity setting
[:SENSe]:CURRent[1]:AC:RANGe:AUTO:ONCE (*1)	Auto-set current sensitivity just once.
[:SENSe]:CURRent[1]:AC:RANGe[:UPPer] (*1)	Current sensitivity (primary PSD)
[:SENSe]:CURRent2:AC:RANGe[:UPPer] (*1)	Current sensitivity (secondary PSD)
[:SENSe]:DATA	Measurement data (set) selection
[:SENSe]:DETector[:FUNCtion] (*1)	Detection mode
[:SENSe]:DREServe	Dynamic reserve
[:SENSe]:FILTer[1][:LPASs]:AUTO:ONCE	Automatic time constant setting
[:SENSe]:FILTer[1][:LPASs]:SLOPe	Attenuation slope (primary PSD)
[:SENSe]:FILTer[1][:LPASs]:TCONstant	Filter Time constant (primary PSD)
[:SENSe]:FILTer[1][:LPASs]:TYPE	Filter type (primary PSD)
[:SENSe]:FILTer2[:LPASs]:SLOPe (*1)	Attenuation slope (secondary PSD)
[:SENSe]:FILTer2[:LPASs]:TCONstant (*1)	Filter Time constant (secondary PSD)
[:SENSe]:FILTer2[:LPASs]:TYPE (*1)	Filter type (secondary PSD)
[:SENSe]:FREQuency[1]?	Frequency (fundamental wave, primary frequency)
[:SENSe]:FREQuency[1]:HARMonics	Harmonic measurement enable (primary PSD)
[:SENSe]:FREQuency[1]:MULTiplier	Harmonic order (primary PSD)
[:SENSe]:FREQuency[1]:SMULtiplier	Subharmonic order (primary PSD)
[:SENSe]:FREQuency2? (*1)	Secondary frequency
[:SENSe]:FREQuency2:HARMonics (*1)	Harmonic measurement enable (secondary PSD)
[:SENSe]:FREQuency2:MULTiplier (*1)	Harmonic order (secondary PSD)
[:SENSe]:NOISe[:SMOothing][:APERture]	Noise smoothing factor
[:SENSe]:PHASe[1]	Reference signal phase shift (primary PSD)
[:SENSe]:PHASe[1]:AUTO:ONCE	Auto phase adjustment (primary PSD)
[:SENSe]:PHASe2 (*1)	Reference signal phase shift (secondary PSD)
[:SENSe]:PHASe2:AUTO:ONCE (*1)	Auto phase adjustment (secondary PSD)
[:SENSe]:ROSCillator:SOURce?	Standard clock selection
[:SENSe]:VOLTage[1]:AC:RANGe:AUTO	Auto voltage sensitivity setting
[:SENSe]:VOLTage[1]:AC:RANGe:AUTO:ONCE	Auto-set voltage sensitivity just once.
[:SENSe]:VOLTage[1]:AC:RANGe[:UPPer]	Voltage sensitivity (primary PSD)
[:SENSe]:VOLTage2:AC:RANGe[:UPPer] (*1)	Voltage sensitivity (secondary PSD)
[:SENSe]:VOLTage5[:DC]:STATe	AUX IN 1 voltage measurement enable
[:SENSe]:VOLTage5[:DC]:TCONstant	AUX IN 1 time constant
[:SENSe]:VOLTage6[:DC]:STATe	AUX IN 2 voltage measurement enable
[:SENSe]:VOLTage6[:DC]:TCONstant	AUX IN 2 time constant

Table 4-2 Subsystem command list

Command	Function / operational target
SOURce subsystem	
:SOURce:FREQuency[1][:CW]	Internal oscillator frequency (fundamental wave, primary frequency)
:SOURce:FREQuency2[:CW] (*1)	Internal oscillator frequency (secondary frequency)
:SOURce:IOSCillator (*1)	Sine wave output oscillator selection
:SOURce:VOLTage:[LEVel][:IMMediate][:AMPLitude]	Sine wave output voltage amplitude
:SOURce:VOLTage:RANGe	Sine wave output voltage range
SOURce5 subsystem	
:SOURce5:VOLTage[:LEVel][:IMMediate]:OFFSet	AUX OUT 1 output voltage
SOURce6 subsystem	
:SOURce6:VOLTage[:LEVel][:IMMediate]:OFFSet	AUX OUT 2 output voltage
STATus subsystem	
:STATus:OPERation:CONDition?	Condition query (OPCR)
:STATus:OPERation:ENABle	Event enable (OPEE)
:STATus:OPERation[:EVENt]?	Event query (OPER)
:STATus:OPERation:NTR	Negative transition filter (ONTR)
:STATus:OPERation:PTR	Positive transition filter (OPTR)
:STATus:QUEStionable:CONDition?	Queries the questionable condition register
:STATus:QUEStionable:ENABle	Set questionable event enable register
:STATus:QUEStionable[:EVENt]?	Queries the questionable event register
:STATus:QUEStionable:NTR	Negative transition filter (QNTR)
:STATus:QUEStionable:PTR	Positive transition filter (QPTR)
SYSTem subsystem	
:SYSTem:ERRor?	Queries the Error contents
:SYSTem:KLOCk	Key lock enable
:SYSTem:LOCal (*2)	Switch to local state
:SYSTem:REMote (*2)	Switch to remote state
:SYSTem:RST	Initialize configuration memory and settings
:SYSTem:RWLock (*2)	Switch to remote state with lock
TRIGger subsystem	
:TRIGger:DELay	Trigger delay time
:TRIGger[:IMMediate]	Trigger (start recording)
:TRIGger:SOURce	Trigger source

*1) LI5650 only. Not supported with LI5645.

*2) RS-232, LAN only. An error occurs with other interfaces.

Note: Query commands end with a query symbol. This table does not include queries for functions that allow both setting and querying.

The LI5645 / LI5650 subsystem command tree is shown below.

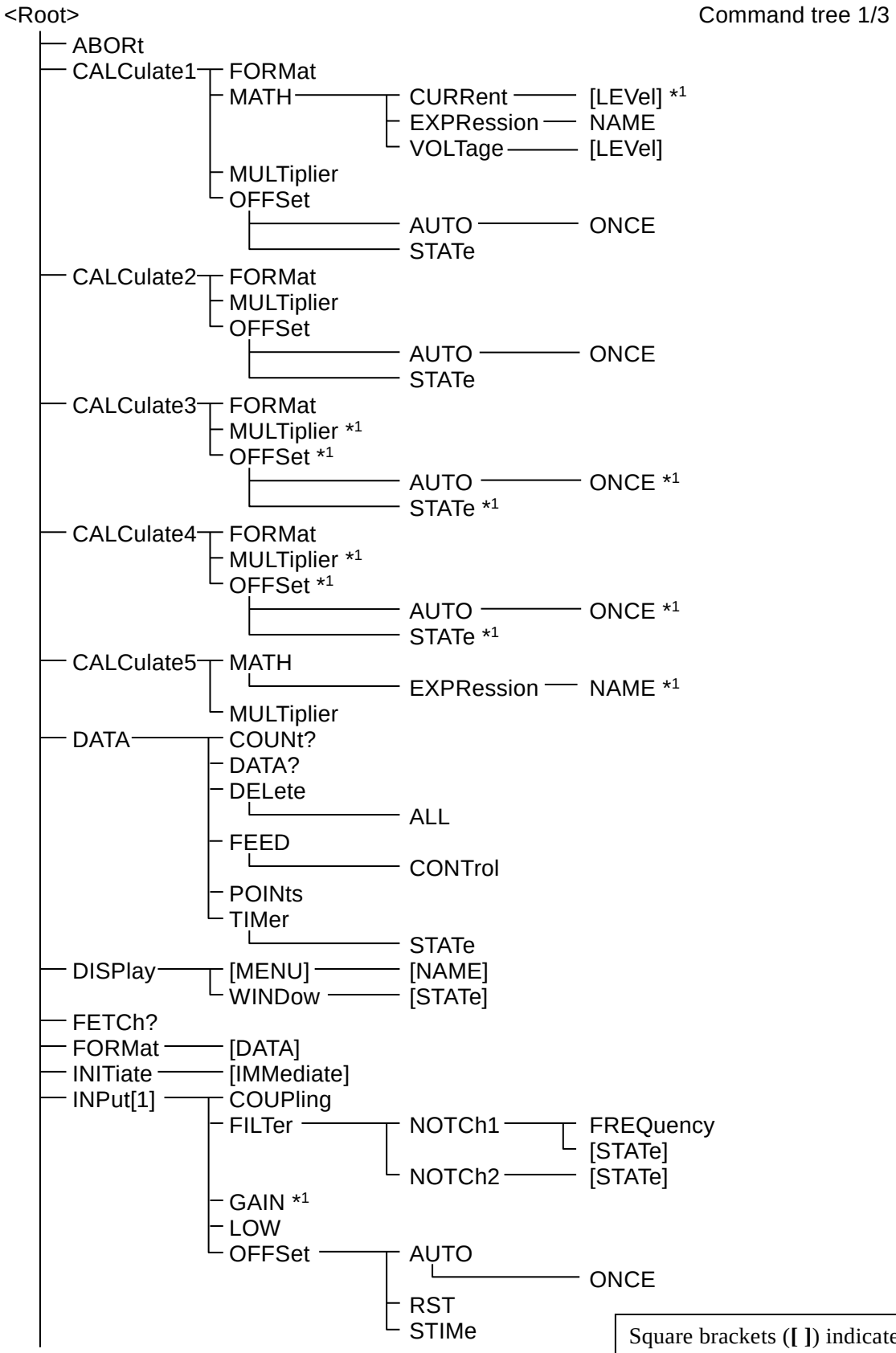

To be continued

Square brackets ([ ]) indicate optional keywords.

Command tree 2/3

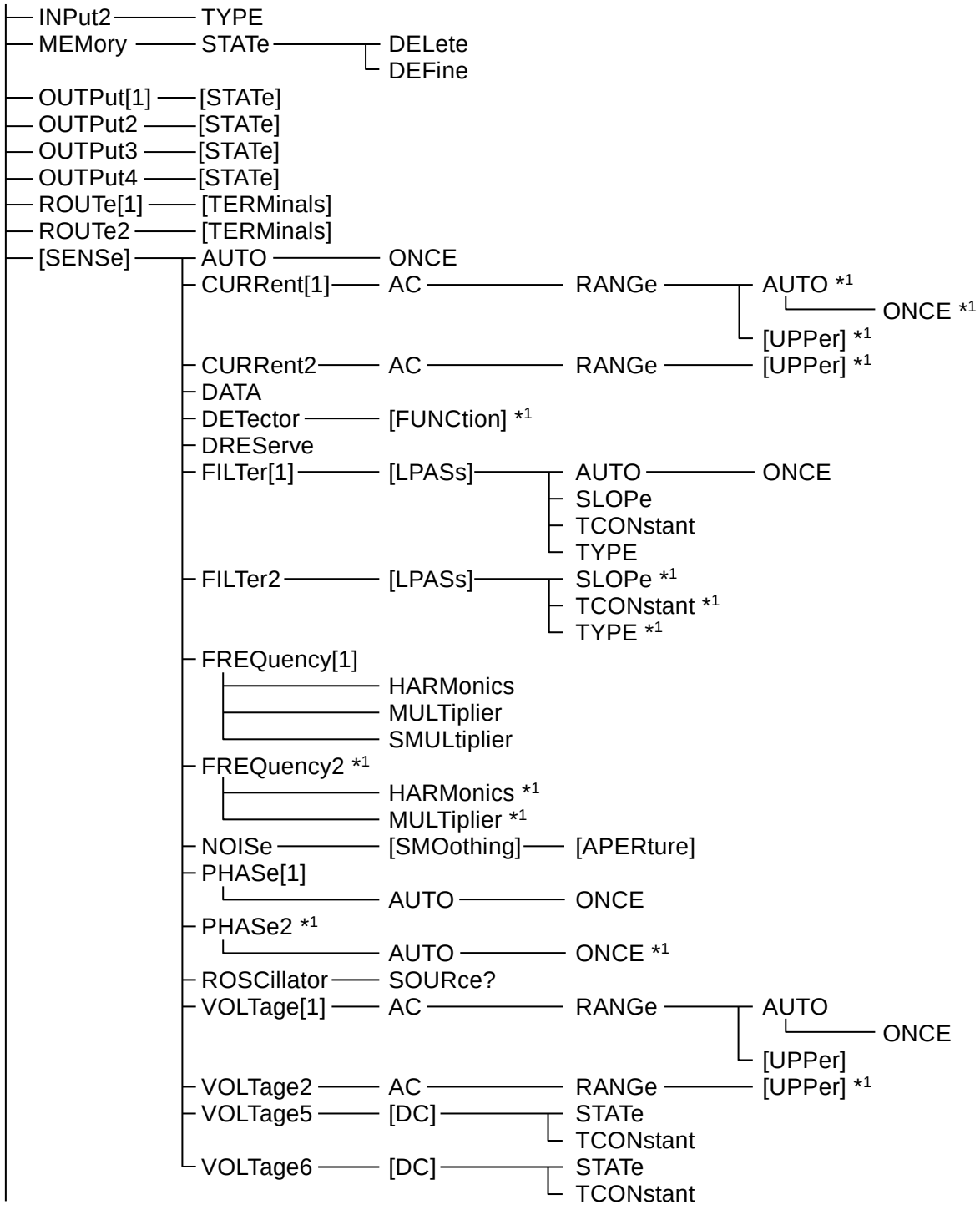

To be continued

Square brackets (**[ ]**) indicate optional keywords.

Command tree 3/3

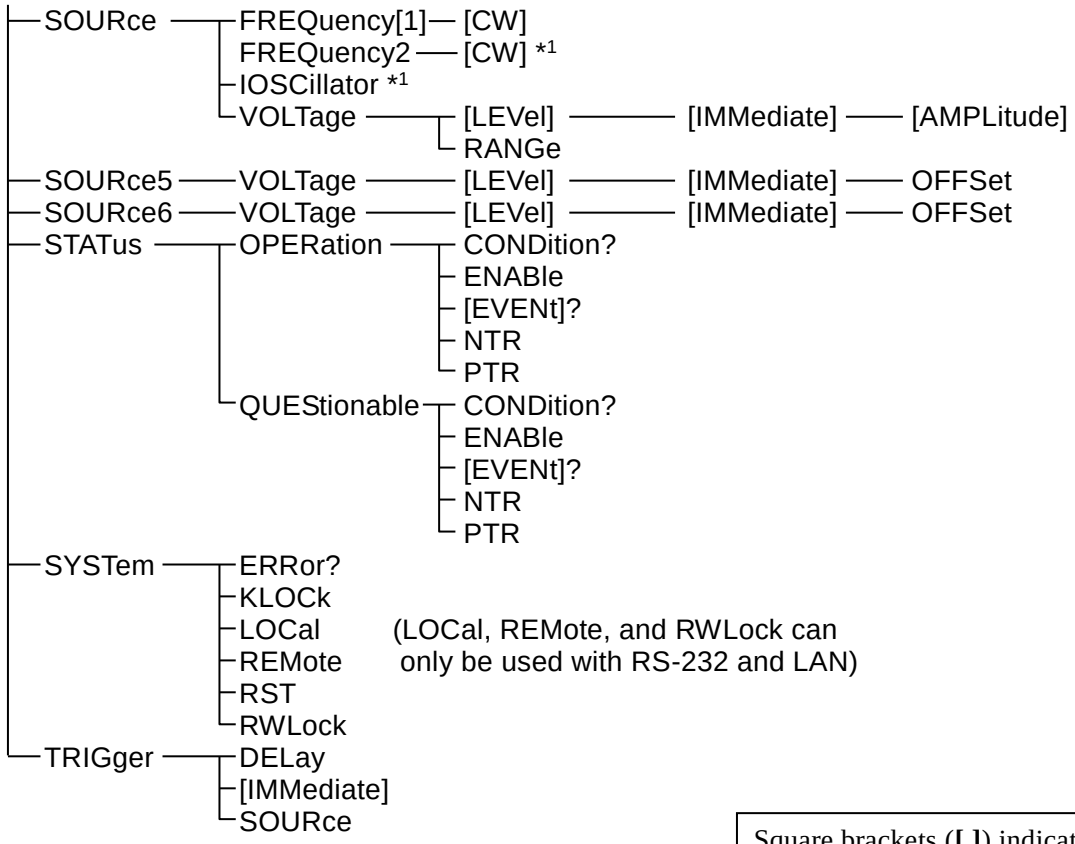

Square brackets (**[ ]**) indicate optional keywords.

*1) LI5650 only. Not supported with LI5645.

5. Command explanation

5.1 Language outline

resents an outline of the language.

5.1.1 Subsystem commands

Commands are grouped according to function. Subsystem commands are ordered hierarchically, with the colon (:) defined as the path separator.

5.1.2 Path separator

The path separator (:) delimits the current keyword from keywords at the next lower level. Each time a colon (:) is detected in a command string, the current path shifts to the next lower level.

Using a colon (:) at the beginning of a command string means "set the current path as root." The root path is also set when the power is turned on, or by the *RST command or a message terminator. Program messages always have the root at the beginning. Also, the colon (:) may be omitted from the beginning of command strings.

:SYST:KLOC 1

↑ ↑ ↑ ↑

① ② ③ ④

① Set current path as root (optional).

② SYSTem subsystem commands (SYSTem is a root command).

③ KLOCk command is included in the SYSTem subsystem.

④ A space is required between header and parameters.

Multiple command strings can be included in a single program message by delimiting them with semicolons (;).

:SENS:FILT1:LPAS:SLOP 12 **;** **:SENS:FILT1:LPAS:**TCON 0.1

Command1 Command2

The above is the equivalent of the following two program messages.

:SENS:FILT1:LPAS:SLOP 12

Current path following execution is **: SENS:FILT1:LPAS**

Subsystem commands at the same level as the first command can be accessed by omitting the colon (:) from the beginning of the second and following command strings.

:SENS:FILT1:LPAS:SLOP 12 **;** TCON 0.1

:SENS:FILT1:LPAS: can be omitted from the second command string

In any case, the concluding program message terminator can be omitted.

Note that the current path may change if a keyword is omitted.

5.1.3 Abbreviation of keywords

In this instruction manual, commands and parameters are described using combinations of upper and lowercase alphabetic characters. Uppercase characters indicate the short (abbreviated) form. Commands from which lowercase characters are omitted have the same functionality as long-form commands that include lowercase characters. However, omission of just part of lowercase letters is not possible.
The use of upper and lowercase characters is a matter of presentation convenience, and there is no distinction between the two at the device level. Upper and lowercase letters can be freely mixed.

Example) Command notation CALCulate1 FORMat?

→	:calculate1:format?	Valid - Long form, all lowercase letters
	:Calc1:Form?	Valid - Short form, mixed upper and lowercase letters
	:**CALCUL**1:FORM?	Invalid - Partially abbreviated
	:CALC1:**FOR**?	Invalid - Excessive abbreviation

5.1.4 Optional keywords

Keywords appearing in square brackets ([ ]) are optional. Device operation is the same regardless of optional keywords are all included or are partially or totally omitted. The two examples below both perform the same function on the device.

Example) Command notation DISPlay[:MENU][:NAME] NORMal

→	:DISP**:MENU:NAME**	NORM	No keywords omitted
	:DISP	NORM	Keywords omitted

5.2 Sequential commands

All LI5645 / LI5650 commands are sequential commands. Commands are executed in sequence, with execution of later commands following that of preceding commands. There are no overlapping commands.

5.3 Detailed command explanations

Functions and command syntax of commands shown in "Table 1 Common commands" and "Table 2 Subsystem command list" are explained below.

[Meaning of symbols]

- Square brackets ([ ]) indicate optional keywords. (Implied keywords)
- Braces ({ }) enclose the parameters of the command string.
- Vertical bars (|) are used to indicate a choice from among multiple keywords.
- Angle brackets (< >) are used to indicate required parameters consisting of numerics or text.

These symbols are used purely for the sake of explanation, are must not be included in actual commands.

Explanation :DISPlay:WINDow[:STATe] {ON|OFF|1|0}
Actual command :DISPlay:WINDow:STATe ON

[Parameter format]

Symbol	Format	Example
NR1	Integer (numeric)	123
NR2	Decimal format without an exponent (numeric)	0.075
NR3	Decimal format with an exponent (numeric)	4.99E+06
CRD	Character string	ALL
SRD	Character string enclosed in double quotation marks	"No error"
bool	Logical value	ON, OFF, 1, 0

- Unless otherwise specified, numbers may be specified in any format, and values specified are rounded to the nearest value if the specified value exceeds the permitted resolution. Further, when a numerical value is set that is not included in the parameter options, it is rounded to the closest value.
- Unless otherwise specified, the minimum numeric value is assumed for numbers that are less than the minimum value, and the maximum numeric value is assumed for numbers that exceed the maximum.
- With numeric parameters for which specification of MAX / MIN is allowed, the maximum numeric value is set when MAX (or MAXIMUM) is specified, and the minimum numeric value is set for MIN (or MINIMUM).
- When the response is a numeric value and the range, resolution, and unit have not been specified, those parameters are the same as in the configuration. Unless otherwise specified, the mantissa of the NR3 format responses has 6 digits.
- For commands whose parameter type varies according to specification format, numbers specified that exceed the ranges indicated are lumped into the same range and resolution as for operation from the panel. For the actual range of numeric that can be set, refer to the panel operating instructions.
- Quotation marks used to enclose character strings can be either single quotation marks or double quotation marks.

[Notes]

- In this explanation, the work "command" refers to both commands and to queries. Keywords which conclude with a question mark (?) are queries.
- No headers are attached to messages sent in response to commands.

5.3.1 Common commands

***CLS**

Explanation	Clears the following statuses. ・ Standard Event Status register ・ Operation Event register ・ Questionable Event register ・ Status byte ・ Error queue Also clears the panel error display.
Setting example	*CLS
Note	The *CLS does not clear the Status Byte register directly. However, except for the MAV bit and RQS bit, the status byte is cleared indirectly. The MAV bit is cleared indirectly when the input buffer is cleared by Device Clear. The RQS bit can be cleared by reading the status through serial polling.

***ESE <mask>**
***ESE?**

Explanation	Sets and queries the Standard Event Status Enable register.
Parameter(s)	<mask> {numeric, range 0 to 255} An error results if range exceeded. For details ☞ "6.3 Standard event status"
Setting example	*ESE 32 Sets 32 to the Standard Event Status Enable register.
Response	<mask> {numeric, format NR1, range 0 to 255}
Query example	*ESE?
Response example	32 The Standard Event Status Enable register contains 32.

***ESR?**

Explanation	Queries content of the Standard Event Status register. Upon querying the Standard Event Status register, all of its bits are cleared to 0.
Response	<Register content> {numeric, format NR1, range 0 to 255} For details ☞ "6.3 Standard event status"
Query example	*ESR?
Response example	16 The Standard Event Status Enable register contains 16.

***IDN?**

Explanation	Queries the model name.
Response	{"<manufacturer name>, <model name>, <serial number>, <firmware version>"} Format SRD
Query example	*IDN?
Response example	"NF Corporation,LI5650,9097772,Ver1.00"

***OPC**

***OPC?**

Explanation	Verifies that execution of all preceding commands has been completed.
Setting example	*OPC Specifies that the OPC bit of the Standard Event Status register be set to 1 when execution of all preceding commands has been completed. Completion of command execution can be verified by monitoring the status.
Explanation	1 1 is returned when execution of all preceding commands has been completed.
Query example	*OPC?
Explanation	1 Execution of all preceding commands has been completed.
Note	*OPC? does not clear the Standard Event Status register's OPC bit. To clear the bit, use Device Clear or the *CLS or *RST command. The OPC bit can be used to trigger SRQ when it becomes 1.

***RCL <memory number>**

Explanation	Restores the settings stored in the specified configuration memory.
Parameter(s)	<memory number> {numeric in range 0 to 9} An error results if range exceeded. When 0 is specified, settings are restored to the power-on settings (the settings at time of power-off). Default settings are written in configuration memories that have not been used to store settings.
Setting example	*RCL 5 Restores the settings stored in configuration memory 5.
Note	An error occurs if the contents of the specified configuration memory have been corrupted.

***RST**

Explanation	Restores default settings. For details ☞ LI5645 / LI5650 Instruction Manual (Operations) "Table 3-2 Settings and default values"
Setting example	*RST

***SAV <memory number>**

Explanation	Saves current settings to the specified configuration memory.
Parameter(s)	<memory number> {numeric in range 1 to 9} An error results if range exceeded.
Setting example	*SAV 5 Saves current settings to configuration memory 5.
Note	Contents of configuration memory are not cleared by the *RST command. To clear contents of configuration memory, ☞ :SYSTem:RST command

***SRE <SRQ mask>**

***SRE?**

Explanation	Sets and queries the Service Request Enable register.
Parameter(s)	<SRQ mask> {numeric in range 0 to 255} An error results if range exceeded. For details ☞ "6.1 Status system outline"
Setting example	*SRE 128
Response	{numeric, format NR1, range 0 to 255}
Query example	*SRE?
Response example	128 The Service Request Enable register contains 128.

***STB?**

Explanation	Queries content of the Status Byte register.
Response	<Register content> {numeric, format NR1, range 0 to 255} For details ☞ "6.2 Status byte"
Query example	*STB?
Response example	128 The Status Byte register contains 128.

***TRG**

Explanation	When the measurement data buffer is enabled, executes a trigger and records data in the measurement buffer. When the internal timer is disabled, measurement data is recorded only once. When the internal timer is enabled, starts recording measurement data according to the internal timer. Enable the measurement data buffer ☞ :DATA:FEED:CONTrol command Set the internal timer ☞ :DATA:TIMer command Before using triggers, the awaiting trigger state must be set with the :INITiate[:IMMediate] command. An error will result if the awaiting trigger state has not been set.
Setting example	*TRG Executes a trigger.

***TST?**

Explanation	Queries results of the internal self-diagnostic.
Response	{numeric, format NR1, range 0}
Query example	TST?
Response example	0
Note	With this device, the response is always 0. It is not possible to check the internal status by external control. Check on the panel operation.

For details ☞ LI5645 / LI5650 Instruction Manual (Operations) "8.5 Self-diagnostic"

***WAI**

Explanation	Postpones execution of ensuing commands until execution of all commands has been completed.
Example of use	Command 1; command 2; *WAI; following commands <program message terminator> Following commands are executed after completion of execution of both command 1 and command 2.
Note	The wait state applied by the *WAI command is cleared by Device Clear. With this equipment, there are no applicable overlapping commands.

5.3.2 Subsystem commands

:ABORt

Explanation: Aborts recording to the measurement data buffer and puts the trigger system in the idle state.

Setting example: :ABOR

:CALCulate1:FORMat {REAL|MLINear|IMAGinary|PHASe|NOISe|AUX1|REAL2|MLINear2}
:CALCulate1:FORMat?

Explanation: Sets/queries the measurement parameters to be displayed and output as DATA1.

Parameter(s):

REAL	X (= R cos θ, primary PSD)
	Xp (= Rp cos θp, primary PSD)
MLINear	R (= $\sqrt{X^2 + Y^2}$, primary PSD)
	Rp (= $\sqrt{Xp^2 + Yp^2}$, primary PSD)
IMAGinary	Y (= R sin θ, primary PSD)
	Yp (= Rp sin θp, primary PSD)
PHASe	θ, θp (primary PSD)
NOISe	Input referred noise density (V / $\sqrt{Hz}$ or A / $\sqrt{Hz}$)
AUX1	AUX IN 1 voltage
REAL2 *1	Xs (= Rs cos θs, secondary PSD)
MLINear2 *1	Rs (= $\sqrt{Xs^2 + Ys^2}$, secondary PSD)

Relationship to panel display is as follows.

Detection mode→	SINGLE	DUAL1 *1	DUAL2 *1, CASCADE *1
REAL	X , Xn	Xp , Xpn	Xp
MLINear	R , Rn	Rp , Rpn	Rp
IMAGinary2	*2	Yp , Ypn	Yp
PHASe	*2	θp , θpn	θp
NOISe	NOISE	NOISE	NOISE
AUX1	AUX1	AUX1	AUX1
REAL2 *1	*2	Xs , Xsn	Xs
MLINear2 *1	*2	Rs , Rsn	Rs

*1: LI5650 only. Not supported with LI5645.

*2: Setting not possible in SINGLE mode.

Setting example: :CALC1:FORM MLIN

Set measurement parameter for DATA 1to R (Rn, Rp, Rpn).

Response: {REAL|MLIN|IMAG|PHAS|NOIS|AUX1|REAL2|MLIN2}

Query example: :CALC1:FORM?

Response example: MLIN

The DATA 1 parameter is R (Rn, Rp, Rpn).

Note Measurement parameters REAL2 and MLIN2 cannot be selected with the LI5645.

:CALCulate1:MATH:CURRent[:LEVel] <reference value>
:CALCulate1:MATH:CURRent[:LEVel]?

Explanation Sets/queries the current reference value for normalize calculation.

Parameter(s) <reference value> {numeric, range +1E–15 to +1E-06, resolution 6 digits, unit Arms}

Setting example :CALC1:MATH:CURR 1.23456E-6

Sets the current reference value for normalize calculation to 1.23456E-6 Arms.

Response {numeric, format NR3}

Query example :CALC1:MATH:CURR?

Response example 1.000000E-06

The current reference value for normalize calculation is 1µArms.

Note This command cannot be used with the LI5645. An error will result.

:CALCulate1:MATH:EXPRession:NAME {DB|PCNT|PCFS} ["Unit"]
:CALCulate1:MATH:EXPRession:NAME?

Explanation Sets/queries the normalize calculation format.

Display and output of normalize results also requires enabling normalize calculation with the :CALCulate5:MATH NORM command.

Reference values are set with

:CALCulate:MATH:CURRent[:LEVel] command (current) and

:CALCulate:MATH:VOLTage[:LEVel] command (voltage)

Parameter(s)

DB The measured value is shown as a log ratio with respect to the reference value.

$20 \times \log_{10}$ (measurement value / reference value), unit dB

PCNT Measurement value displayed as percentage of reference value.

(measurement value / reference value) × 100, unit %

PCFS Measurement value displayed as percentage of sensitivity (full scale).

(measurement value / sensitivity) × 100, unit % of FS (display is %FS)

"Unit" Specify an alphanumeric character string of up to 3 characters.

When specified, the string is displayed instead of dB or %.

Characters allowed are {A to Z, a to z, 0 to 9, #, @, -, (space)}

Setting example :CALC1:MATH:EXPR:NAME DB ,"dBv"

Sets dB as the normalize calculation format and dBv for unit display.

Response {DB|PCNT|PCFS}[,<Unit>]

If a character string has been set for unit display, that string is included in the response.

Query example :CALC1:MATH:EXPR:NAME?

Response	DB ,"dBv"
	Normalize calculation format is dB, and unit display is dBv.

:CALCulate1:MATH:VOLTage[:LEVel] <reference value>

:CALCulate1:MATH:VOLTage[:LEVel]?

Explanation	Sets/queries the voltage reference value for normalize calculation.
Parameter(s)	<reference value> {numeric, range +1E−9 to +1E+1, resolution 6 digits, unit Vrms}
Setting example	:CALC1:MATH:VOLT 1.23456E-6
	Sets the voltage reference value for normalize calculation to 1.23456E-6 Vrms.
Response	{numeric, format NR3}
Query example	:CALC1:MATH:VOLT?
Response example	1.000000E-06
	The voltage reference value for normalize calculation is 1μVrms.

:CALCulate1:MULTiplier <multiplier>

:CALCulate1:MULTiplier?

Explanation	Sets/queries the primary PSD R, X output common EXPAND multiplier.
	Display and output of EXPAND results also requires
	enabling EXPAND calculation with the :CALCulate5:MATH EXP command.
Parameter(s)	<multiplier>:{1|10|100}
Setting example	:CALC1:MULT 10
	Sets primary PSD R, X output common EXPAND multiplier to 10.
	The effective sensitivity (full scale) is 1/10 of the setting.
Response	<multiplier> {numeric, format NR1}
Query example	:CALC1:MULT?
Setting example	10
	primary PSD R, X output common EXPAND multiplier is 10.
Note	The EXPAND multiplier only affects X, Y, R. It does not affect other parameters.

:CALCulate1:OFFSet <offset>

:CALCulate1:OFFSet?

Explanation	Sets/queries the offset for the primary PSD's X output. For offset adjustment, also enable offset with the :CALCulate1:OFFSet:STATe ON command.
Parameters	<offset> {numeric, range –105 to +105, resolution 0.001, unit %} % is with respect to sensitivity full scale.
Setting example	:CALC1:OFFS 43 The offset for X is 43% of sensitivity full scale. The equivalent of 43% of full scale is subtracted from the original X value.
Response	<offset> {numeric, format NR3}
Query example	:CALC1:OFFS?
Response example	4.300000E+01 The X offset is 43%.
Note	The EXPAND multiplier is applied after offset adjustment. Unless otherwise specified, the mantissa of the NR3 format responses has 6 digits.

:CALCulate1:OFFSet:AUTO:ONCE

Explanation	Automatically sets the X offset and Y offset so that primary PSD's X output and Y output at that point become zero, and enables offset adjustment.
Setting example	:CALC1:OFFS:AUTO:ONCE Automatically adjusts offset so that X output and Y output become zero.
Note	If the range of possible adjustment is exceeded, adjustment is made within the possible range.

:CALCulate1:OFFSet:STATe {ON|OFF|1|0}

:CALCulate1:OFFSet:STATe?

Explanation	Sets whether offset is adjusted for the primary PSD's X output.
Parameter(s)	{ON|1} Enables offset adjustment. {OFF|0} Disables offset adjustment.
Setting example	:CALC1:OFFS:STAT ON Enables X offset adjustment.
Response	{1|0}
Query example	:CALC1:OFFS:STAT?
Response example	1 X offset adjustment is enabled.

:CALCulate2:FORMat {IMAGinary|PHASe|AUX1|AUX2|REAL2|MLINear2|IMAGinary2|PHASe2}

:CALCulate2:FORMat?

Explanation: Sets/queries the measurement parameters to be displayed and output as DATA2.

Parameter(s):

IMAGinary	Y (= R sin θ, primary PSD)
	Yp (= Rp sin θp, primary PSD)
PHASe	θ, θp (primary PSD)
AUX1	AUX IN 1 voltage
AUX2	AUX IN 2 voltage
REAL2 *1	Xs (= Rs cos θs, secondary PSD)
MLINear2 *1	Rs (= $\sqrt{Xs^2 + Ys^2}$, secondary PSD)
IMAGinary2 *1	Ys (= Rs sin θs, secondary PSD)
PHASe2 *1	θ, θs (secondary PSD)

Relationship to panel display is as follows.

Detection mode→	SINGLE	DUAL1 *1	DUAL2 *1, CASCADE *1
IMAGinary	Y , Yn	Yp , Ypn	Yp
PHASe	θ , θn	θp ,θpn	θp
AUX1	AUX1	AUX1	AUX1
AUX2	AUX2	AUX2	AUX2
REAL2 *1	*2	Xs , Xsn	Xs
MLINear2 *1	*2	Rs , Rsn	Rs
IMAGinary2 *1	*2	Ys , Ysn	Ys
PHASe2 *1	*2	θs , θsn	θs

*1: LI5650 only. Not supported with LI5645.

*2: Setting not possible in SINGLE mode.

Setting example: :CALC2:FORM PHAS

Set measurement parameter for DATA 2 to θ (θn, θp, θpn).

Response: {IMAG|PHAS|AUX1|AUX2|REAL2|MLIN2|IMAG2|PHAS2}

Query example: :CALC2:FORM?

Response example: PHAS

DATA 2 measurement parameters are θ (θn, θp, θpn).

Note: Measurement parameters REAL2, MLIN2, IMAG2 and PHAS2 cannot be selected with the LI5645.

:CALCulate2: MULTiplier <multiplier>

:CALCulate2: MULTiplier?

Explanation	Sets/queries the primary PSD's Y output EXPAND multiplier.
	Display and output of EXPAND results also requires
	enabling EXPAND calculation with the :CALCulate5:MATH EXP command.
Parameter(s)	<multiplier>:{1|10|100}
Setting example	:CALC2:MULT 10
	Sets primary PSD output EXPAND multiplier to 10.
	The effective sensitivity (full scale) is 1/10 of the setting.
Response	<multiplier> {numeric, format NR1}
Query example	:CALC2:MULT?
Response example	10
	primary PSD's Y output common EXPAND multiplier is 10.
Note	The multiplier only affects X, Y, R. It does not affect other parameters.

:CALCulate2:OFFSet <offset>

:CALCulate2:OFFSet?

Explanation	Sets/queries the offset for the primary PSD's Y output.
	For offset adjustment, also enable offset with the
	:CALCulate2:OFFSet:STATe ON command.
Parameters	<offset> {numeric, range –105 to +105, resolution 0.001, unit %}
	% is with respect to sensitivity (full scale).
Setting example	:CALC2:OFFS 43
	The offset for Y is 43% of sensitivity full scale.
	The equivalent of 43% is subtracted from the original Y value.
Response	<offset> {numeric, format NR3}
Query example	:CALC2:OFFS?
Response example	4.300000E+01
	The Y offset is 43%.
Note	The EXPAND multiplier is applied after offset adjustment.

:CALCulate2:OFFSet:AUTO:ONCE

Explanation	Automatically sets the X offset and Y offset so that primary PSD's X output and Y output at that point become zero.
Setting example	:CALC2:OFFS:AUTO:ONCE
	Automatically adjusts offset so that X output and Y output become zero.
Note	This function is the same as that of the :CALCulate1:OFFSet:AUTO:ONCE command. Both of these commands work on both X and Y. Automatic setting of just X or just Y is not possible.

:CALCulate2:OFFSet:STATe {ON|OFF|1|0}

:CALCulate2:OFFSet:STATe?

Explanation	Sets whether offset is adjusted for primary PSD's Y output.
Parameter(s)	{ON|1} Enables offset adjustment.
	{OFF|0} Disables offset adjustment.
Setting example	:CALC2:OFFS:STAT ON
	Enables Y offset adjustment.
Response	{1|0}
Query example	:CALC2:OFFS:STAT?
Response example	1
	Y offset adjustment is enabled.

:CALCulate3:FORMat {REAL|MLINear|IMAGinary|PHASe|REAL2|MLINear2}

:CALCulate3:FORMat?

Explanation: Sets/queries the measurement parameters to be displayed and output as DATA3.

Parameter(s):

REAL	X , Xp (primary PSD)
MLINear	R , Rp (primary PSD)
IMAGinary	Y , Yp (primary PSD)
PHASe	θ , θp (primary PSD)
REAL2 *1	Xs (secondary PSD)
MLINear2 *1	Rs (secondary PSD)

Relationship to panel display is as follows.

Detection mode→	SINGLE	DUAL1 *1	DUAL2 *1, CASCADE *1
REAL	X , Xn	Xp , Xpn	Xp
MLINear	R , Rp	Rp , Rpn	Rp
IMAGinary	*2	Yp , Ypn	Yp
PHASe	*2	θp , θpn	θp
REAL2 *1	*2	Xs , Xsn	Xs
MLINear2 *1	*2	Rs , Rsn	Rs

*1: LI5650 only. Not supported with LI5645.

*2: Setting not possible in SINGLE mode.

Setting example	:CALC3:FORM REAL
	Set measurement parameter for DATA 3 to X (Xn, Xp, Xpn).
Response	{REAL|MLIN|IMAG|PHAS|REAL2|MLIN2}
Query example	:CALC2:FORM?
Response example	REAL
	Measurement parameter for DATA 3 is X (Xn, Xp, Xpn).
Note	Measurement parameters REAL2 and MLIN2 cannot be selected with the LI5645.

:CALCulate3 :MULTiplier <multiplier>

:CALCulate3:MULTiplier?

Explanation	Sets/queries the secondary PSD's R, X output common EXPAND multiplier. Display and output of EXPAND results also requires enabling EXPAND calculation with the :CALCulate5:MATH EXP command.
Parameter(s)	<multiplier>:{1|10|100}
Setting example	:CALC3:MULT 10 Sets secondary PSD R, X output common EXPAND multiplier to 10. The effective sensitivity (full scale) is 1/10 of the setting.
Response	<multiplier> {numeric, format NR1}
Query example	:CALC3:MULT?
Setting example	10 Secondary PSD R, X output common EXPAND multiplier is 10.
Note	This command cannot be used with the LI5645. An error will result.

:CALCulate3:OFFSet <offset>

:CALCulate3:OFFSet?

Explanation	Sets/queries the offset with respect to the secondary PSD's X output. For offset adjustment, also enable offset with the :CALCulate3:OFFSet:STATe ON command.
Parameters	<offset> {numeric, range –105 to +105, resolution 0.001, unit %} % is with respect to sensitivity full scale.
Setting example	:CALC3:OFFS 43 Sets the offset with respect to secondary PSD X output to 43% of sensitivity full scale. The equivalent of 43% is subtracted from the original X value.
Response	<offset> {numeric, format NR3}
Query example	:CALC3:OFFS?
Response example	4.300000E+01 The offset with respect to secondary PSD X output is 43% of sensitivity full scale.
Note	This command cannot be used with the LI5645. An error will result.

:CALCulate3:OFFSet:AUTO:ONCE

Explanation	Automatically sets offset so that secondary PSD's X and Y output become zero.
Setting example	:CALC3:OFFS:AUTO:ONCE Automatically adjusts offset so that secondary PSD's X and Y outputs become zero.
Note	This command cannot be used with the LI5645. An error will result. If the range of possible adjustment is exceeded, adjustment is made within the possible range.

:CALCulate3:OFFSet:STATe {ON|OFF|1|0}

:CALCulate3:OFFSet:STATe?

Explanation	Sets whether offset is adjusted with respect to the secondary PSD's X output.
Parameter(s)	{ON|1} Enables offset adjustment.
	{OFF|0} Disables offset adjustment.
Setting example	:CALC3:OFFS:STAT ON
	Enables offset adjustment for the secondary PSD's X output.
Response	{1|0}
Query example	:CALC3:OFFS:STAT?
Response example	1
	Secondary PSD's X offset adjustment is enabled.
Note	This command cannot be used with the LI5645. An error will result.

:CALCulate4:FORMat {IMAGinary|PHASe|REAL2|MLINear2|IMAGinary2|PHASe2}

:CALCulate4:FORMat?

Explanation	Sets/queries the measurement parameters to be displayed and output as DATA4.
Parameter(s)	IMAGinary Y, Yp (primary PSD)
	PHASe θ, θp (primary PSD)
	REAL2 *1 Xs (secondary PSD)
	MLINear2 *1 Rs (secondary PSD)
	IMAGinary2 *1 Ys (secondary PSD)
	PHASe2 *1 θs (secondary PSD)

Relationship to panel display is as follows.

Detection mode→	SINGLE	DUAL1 *1	DUAL2 *1, CASCADE *1
IMAGinary	Y , Yn	Yp , Ypn	Yp
PHASe	θ , θn	θp , θpn	θp
REAL2 *1	*2	Xs , Xsn	Xs
MLINear2 *1	*2	Rs , Rsn	Rs
IMAGinary2 *1	*2	Ys , Ysn	Ys
PHASe2 *1	*2	θs , θsn	θs

*1: LI5650 only. Not supported with LI5645.

*2: Setting not possible in SINGLE mode.

	Setting example :CALC4:FORM IMAG
	Set measurement parameter for DATA 4 to Y (Yn, Yp, Ypn).
Response	{IMAG|PHAS|REAL2|MLIN2|IMAG2|PHAS2}
Query example	:CALC4:FORM?
Response example	IMAG
	Measurement parameter for DATA 4 is Y (Yn, Yp, Ypn).
Note	Measurement parameters REAL2, MLIN2, IMAG2 and PHAS2 cannot be selected with the LI5645.

:CALCulate4:MULTiplier <multiplier>

:CALCulate4:MULTiplier?

Explanation	Sets/queries the secondary PSD's Y output EXPAND multiplier. Display and output of EXPAND results also requires enabling EXPAND calculation with the :CALCulate5:MATH EXP command.
Parameter(s)	<multiplier>:{1|10|100}
Setting example	:CALC4:MULT 10 Sets secondary PSD output EXPAND multiplier to 10. The effective sensitivity (full scale) is 1/10 of the setting.
Response	<multiplier> {numeric, format NR1}
Query example	:CALC4:MULT?
Response example	10 Secondary PSD's Y output common EXPAND multiplier is 10.
Note	This command cannot be used with the LI5645. An error will result.

:CALCulate4:OFFSet <offset>

:CALCulate4:OFFSet?

Explanation	Sets/queries the offset for the secondary PSD's Y output. For offset adjustment, also enable offset with the :CALCulate4:OFFSet:STATe ON command.
Parameters	<offset> {numeric, range –105 to +105, resolution 0.001, unit %} % is with respect to sensitivity full scale.
Setting example	:CALC4:OFFS 43 Sets the offset with respect to secondary PSD Y output to 43% of sensitivity full scale. The equivalent of 43% is subtracted from the original Y value.
Response	<offset> {numeric, format NR3}
Query example	:CALC4:OFFS?
Response example	4.300000E+01 The offset with respect to secondary PSD Y output is 43% of sensitivity full scale.
Note	This command cannot be used with the LI5645. An error will result.

:CALCulate4:OFFSet:AUTO:ONCE

Explanation	Automatically sets offset so that secondary PSD's X and Y output become zero.
Setting example	:CALC4:OFFS:AUTO:ONCE Automatically adjusts offset so that secondary PSD's X and Y outputs become zero.
Note	This command cannot be used with the LI5645. An error will result. This function is the same as that of the :CALCulate3:OFFSet:AUTO:ONCE command. Both of these commands work on both X and Y. Automatic setting of just X or just Y is not possible.

:CALCulate4:OFFSet:STATe {ON|OFF|1|0}

:CALCulate4:OFFSet:STATe?

Explanation	Sets whether offset is adjusted for secondary PSD's Y output.
Parameter(s)	{ON|1} Enables offset adjustment.
	{OFF|0} Disables offset adjustment.
Setting example	:CALC4:OFFS:STAT ON
	Enables offset adjustment for the secondary PSD's Y output.
Response	{1|0}
Query example	:CALC4:OFFS:STAT?
Response example	1
	Secondary PSD’s Y offset adjustment is enabled.
Note	This command cannot be used with the LI5645. An error will result.

:CALCulate5:MATH {OFF|EXPand|NORMalize|RATio}

:CALCulate5:MATH?

Explanation	Sets/queries the calculation method for measurement value to be displayed and output.	
	One method can be selected from among EXPAND, normalize calculation, and ratio calculation.	
Parameter(s)	OFF	No calculation is performed on the measurement value.
	EXPand	Enables EXPAND (enlarge).
	NORMalize	Enables normalize calculation
	RATio	Enables ratio calculation.
Setting example	:CALC5:MATH EXP	
	Enables EXPAND.	
Response	{OFF|EXP|NORM|RAT}	
Query example	:CALC5:MATH?	
Response example	OFF	
	Calculation is not performed on measurement values.	

:CALCulate5:MATH:EXPRession:NAME {RATio|RATio2}

:CALCulate5:MATH:EXPRession:NAME?

Explanation	Sets/queries the ratio calculation format. Display and output of results also requires enabling ratio calculation with the :CALCulate5:MATH RATio command.
Parameter(s)	RATio: Normal ratio calculation (denominator: AUX IN 1) This can be used with every detection mode. Result (In SINGLE, DUAL1, or DUAL2 mode) = Ratio multiplier × primary PSD output (X, Y, R [% of FS]) / AUX IN 1 [% of FS] Result (In CASCADE mode) = Ratio multiplier × secondary PSD output (X, Y, R [% of FS]) / AUX IN 1 [% of FS] RATio2: Expanded ratio calculation (denominator: secondary PSD output) Can only be used with DUAL1 and DUAL2 detection modes. Result = Ratio multiplier × primary PSD output (X, Y, R [% of FS]) / secondary PSD output [X % of FS]
Setting example	:CALC5:MATH:EXPR:NAME RAT Sets RATio as the calculation format.
Response	{RAT|RAT2}
Query example	:CALC5:MATH:EXPR:NAME?
Response example	RAT The ratio calculation format is RATio.
Note	When the ratio calculation is invalid, the ratio calculation is not carried, it does not result in an error.

:CALCulate5 :MULTiplier <factor>

:CALCulate5:MULTiplier?

Explanation	Sets/queries the ratio multiplier.
Parameter(s)	<factor> {numeric, range 0.10000 to 10.00000, resolution 0.00001}
Setting example	:CALC5:MULT 2
	Sets the ratio multiplier to 2.
Response	{numeric, format NR3}
Query example	:CALC5:MULT?
Response example	2.000000E+00
	The ratio multiplier is 2.

:DATA:COUNt? {BUF1|BUF2|BUF3}

Explanation	Queries the number of data sampling points recorded in the measurement data buffer.
Parameter(s)	BUF1 Indicates that measurement data buffer 1 is to be queried.
	BUF2 Indicates that measurement data buffer 2 is to be queried.
	BUF3 Indicates that measurement data buffer 3 is to be queried.
Response	<number of sample points>
	BUF1, BUF2 {numeric, format NR1, range 0 to 8192 }
	BUF3 {numeric, format NR1, range 0 to 65536 }
Query example	:DATA:COUN? BUF1
Response example	256
	The number of measurement data samples recorded in measurement data buffer 1 is 256.
Note	When the measurement data buffer is empty, the response is 0.
	Clearing the measurement data buffer ☞ :DATA:DELete command

:DATA:DATA? {BUF1|BUF2|BUF3} [, <block length>[,<start position>]]

Explanation: Queries the contents of the measurement data buffer (the measurement values).

Parameter(s):

BUF1 Indicates that measurement data buffer 1 is to be queried.

BUF2 Indicates that measurement data buffer 2 is to be queried.

BUF3 Indicates that measurement data buffer 3 is to be queried.

<block length>

{numeric, format NR1, range 1 .. buffer size }

Sets the block length of measurement data to be acquired from the buffer (the number of sample points).

Measurement data is separated into blocks for transmission.

If the block length is omitted, all of the measurement data is returned as a single block.

Setting the measurement data buffer size ☞ :DATA:POINts command

<start position>

{numeric, format NR1, range 0 .. buffer size−1}

Specifies the start position of measurement data to be acquired.

If omitted, data is acquired from the recording start position.

This specification is invalid if used with BUF3.

Response: Content of BUF1, BUF2, or BUF3

<measurement data block>

<measurement data set a>[, <measurement data set a+1>,

.. , <measurement data set a+(b−1)>] <message terminator>

a: Specified record start position

b: Specified block length

<measurement data set>

[STATUS], [DATA1], [DATA2], [DATA3], [DATA4], [FREQ]

This is a set of measurements for one sample point.

Content specification ☞ :DATA:FEED command

STATUS {numeric, range 0 to 31}

0 No abnormality

1 PROTECT

Voltage a signal input connector A or B exceeds rated limit.

2 INPUT

Over level somewhere from the signal input connector to the PSD

4 OUTPUT

Over level at a time constant filter, amplification, or calculation downstream from the PSD.

8 AUX

Maximum input voltage exceeded at AUX IN 1 or 2.

16 UNLOCK

The reference signal source is REF IN or SIGNAL and is not synchronized.

DATA1, DATA2, DATA3, DATA4, FREQ

Data transfer formats for each value ☞ :FORMat[:DATA] command

The measurement data block and measurement data set above show the format in ASCII. The sequence of values are the same for both real numbers and integers, but commas are not used to delimit values, no message terminator is appended, and a single measurement data block is transferred as a single fixed length data block.

Note

If the number of measurement data sets from the specified start position do not fill the specified block length, remaining places in the measurement data set are filled with zeros.

When the content of BUF3 is queried, measurement data blocks are sent starting with the oldest data. The data read is deleted from the measurement data buffer, releasing a proportionate amount of space in the buffer (First In, First Out).

Query example :DATA:DATA? BUF1

Response example 2.732512E-01, 1.215909E+02, 2.733309E-01, 1.215591E+02, ...

Deriving the actual value ☞ :FORMat[:DATA] command

(When :DATA:FEED BUF1,6;:FORM ASC is set taking DATA1 as R, DATA2 as θ)

:DATA:DELete {BUF1|BUF2|BUF3}

Explanation: Clears the specified measurement data buffer.

Parameter(s):
- BUF1 Clears measurement data buffer 1.
- BUF2 Clears measurement data buffer 2.
- BUF3 Clears measurement data buffer 3.

Setting example: :DATA:DEL BUF1
Clears measurement data buffer 1.

:DATA:DELete:ALL

Explanation: Clears all measurement data buffers.

Setting example: :DATA:DEL:ALL
Clears measurement data buffers 1, 2, and 3.

Note: Clearing a specified measurement data buffer ☞ :DATA:DELete command

:DATA:FEED {BUF1|BUF2|BUF3}, <measurement data>
:DATA:FEED? {BUF1|BUF2|BUF3}

Explanation: Sets/queries measurement data sets recorded in measurement data buffer 1, 2, or 3. Recording of measurement data is specified separately using the :DATA:FEED:CONT command.

Parameter(s):
- BUF1 Indicates that measurement data buffer 1 is to be set/queried.
- BUF2 Indicates that measurement data buffer 2 is to be set/queried.
- BUF3 Indicates that measurement data buffer 3 is to be set/queried.

<measurement data>
{numeric, range 0 to 63}

1 STATUS (16 bits = 1 word)
Records the measurement status.
Measurement status content ☞ :DATA:DATA command

2 DATA1 (16 bits = 1 word)
Records the value of DATA1.

4 DATA2 (16 bits = 1 word)
Records the value of DATA2.

8 DATA3 (16 bits = 1 word)
Records the value of DATA3.

16 DATA4 (16 bits = 1 word)
Records the value of DATA4.

32 FREQ (32 bits = 2 words)
Records the frequency value.
The fundamental wave or primary frequency is recorded when the detection mode is SINGLE, DUAL1, or DUAL2, and the secondary frequency is recorded when the detection mode is CASCADE.

When recording multiple measurement data simultaneously, a maximum of 5

words can be selected. It is not possible to select the same parameter more than once. Data is recorded starting with the smallest value. It is not possible to change the recording sequence. Nothing is recorded if 0 is set.

Setting example :DATA:FEED BUF1, 2

Set recording so that only the value of DATA1 is recorded in measurement data buffer 1.

Response {numeric, format NR1, range 0 to 63}

Query example :DATA:FEED? BUF1

Response example 3

Measurement data recorded in measurement data buffer 1 is STATUS and DATA1.

Note Measurement data recording format and resolution

BUF1, BUF2, BUF3: 16-bit signed integer (–32,768 to +32,767)

Frequency recording format and resolution

32-bit unsigned integer (0 to 4,294,967,295)

Actual values can be calculated with reference to full scale.

Derivation ☞ :FORMat[:DATA] command

When the measurement data set stored in a measurement data buffer is changed, that measurement data buffer is cleared. The maximum recording rate depends on the recording parameters and is limited.

:DATA:FEED:CONTrol {BUF1|BUF2|BUF3}, {ALWays|NEVer}

:DATA:FEED:CONTrol? {BUF1|BUF2|BUF3}

Explanation Sets/queries whether measurement data is to be recorded in a measurement data buffer.

Parameter(s)

BUF1	Indicates that measurement data buffer 1 is to be set/queried.
BUF2	Indicates that measurement data buffer 2 is to be set/queried.
BUF3	Indicates that measurement data buffer 3 is to be set/queried.
ALWays	Indicates that measurement data is to be recorded.
NEVer	Indicates that measurement data is not to be recorded.

Setting example :DATA:FEED:CONT BUF1,ALW

Sets recording of measurement in measurement data buffer 1.

Response {ALW|NEV}

Query example :DATA:FEED:CONT? BUF1

Response example ALW

Measurement data buffer 1 is set for recording of measurement data.

Note Details of measurement data to be recorded

☞ :DATA:FEED command

Simultaneous recording to multiple measurement data buffers is not possible. When one of the buffer is set to ALWays, all other buffers are NEVer.

Once recording of measurement data to a measurement data buffer has been set, measurement data is not sent to the output buffer.

:DATA:POINts {BUF1|BUF2|BUF3}, <buffer size>

:DATA:POINts? {BUF1|BUF2|BUF3}

Explanation	Sets/queries measurement data buffer size.
	When size is set, the specified measurement data buffer is cleared.
	Size is specified in sample points.
Parameter(s)	BUF1 Indicates that measurement data buffer 1 is to be set/queried.
	BUF2 Indicates that measurement data buffer 2 is to be set/queried.
	BUF3 Indicates that measurement data buffer 3 is to be set/queried.
	<buffer size> Can be specified as MAX or MIN.
	BUF1, BUF2 {numeric, range 16 to 8192}
	BUF3 {numeric, range 16 to 65536}
Setting example	:DATA:POIN BUF1, 100
	Sets the size of measurement data buffer 1 to 100 (sample points).
Response	{numeric, format NR1}
Query example	:DATA:POIN? BUF1
Response example	100
	Measurement data buffer size is 100 (sample points).
Note	When the measurement data buffer becomes full, the full status is set and further measurement data is not recorded.
	☞ "6.4 Operation status"
	After the buffer becomes full, clear it to resume recording.

:DATA:TIMer <time interval>

:DATA:TIMer?

Explanation	Sets/queries the internal timer time interval.
	The internal timer must be enabled with the :DATA:TIMer:STATe command.
Parameter(s)	<time interval> {numeric, range 9.6E−6 to 20, unit s, resolution 640ns }
	The suffix M (10^{-3}) and unit S may be used.
Setting example	:DATA:TIM 10E−3
	Sets the time interval to 10 ms.
Response	{numeric, format NR3}
Query example	:DATA:TIM?
Response example	1.000000E−02
	Time interval is 10ms.

:DATA:TIMer:STATe {ON|OFF|1|0}

:DATA:TIMer:STATe?

Explanation	Sets/queries the internal timer. When recording to the measurement data buffer is enabled, measurement data is recorded at the set time interval when the internal timer is enabled. Enableing measurement data buffer ☞ :DATA:FEED:CONTrol command Setting time interval ☞ :DATA:TIMer command
Parameter(s)	{ON|1} Enables the internal timer. {OFF|0} Disables the internal timer.
Setting example	:DATA:TIM:STAT 1 Enables the internal timer.
Response	{1|0}
Query example	:DATA:TIM:STAT?
Response example	1 Internal timer is disabled.

:DISPlay[:MENU][:NAME] {NORMal|LARGe|FINE}

:DISPlay[:MENU][:NAME]?

Explanation	Sets/queries the measurement screen.
Parameter(s)	NORMal Standard measurement screen LARGe Enlarged measurement screen (displays measurement values in large size) FINE Detailed measurement screen (displays as many settings as possible)
Setting example	:DISP LARG Displays measurement values in large size.
Response	{NORM|LARG|FINE}
Query example	:DISP?
Response example	LARG Measurement values are displayed in large size mode.

:DISPlay:WINDow[:STATe] {ON|OFF|1|0}

:DISPlay:WINDow[:STATe]?

Example	Sets/queries lamp/display on/off state.
Parameter(s)	{ON|1} On {OFF|0} Off
Setting example	:DISP:WIND OFF Turns off the lamp and display.
Response	{1|0}
Query example	:DISP:WIND?
Response example	0 Lamp and display are off.

:FETCh?

Explanation: Queries the most recent measurement data.

Response: <measurement data set>

[STATUS], [DATA1], [DATA2], [DATA3], [DATA4], [FREQ]

Content specification ☞ [:SENSe]:DATA command

STATUS

{numeric, range 0 to 31}

0 No abnormality

1 PROTECT

Voltage a signal input connector A or B exceeds rated limit.

2 INPUT

Over level somewhere from the signal input connector to the PSD

4 OUTPUT

Over level at a time constant filter, amplification, or calculation downstream from the PSD.

8 AUX

Maximum input voltage exceeded at AUX IN 1 or 2.

16 UNLOCK

The reference signal source is REF IN or SIGNAL and is not synchronized.

DATA1, DATA2, DATA3, DATA4, FREQ

For data transfer formats for each value

☞ :FORMat[:DATA] command

Query example: :FETC?

Response example: 0, 3.456789E-06, 1.234567E+02

(with :DATA 7;:FORM ASC)

STATUS＝0 (no abnormality),

DATA1 = 3.456789E−06, DATA2 = 1.234567E+02 (123.4567)

Note: Correct measurement values cannot be obtained if INPUT is over-level. Verify STATUS and "6.5 Questionable status" along with measurement values.

Although the frequency value is indeterminate in the UNLOCK state, measurement values of DATA1 etc. can still be obtained.

There can be some displacement between measured values, measurement status, and sampling time of frequency values.

:FORMat[:DATA] {ASCii|REAL|INTeger}

:FORMat[:DATA]?

Explanation	Sets/queries the data transfer format. The set data transfer format applies to response messages returned to the :DATA:DATA? and FETCh? queries.
Parameter(s)	ASCii ASCII format (NR1, NR2, NR3, character string) REAL Real number format (double-precision floating point, 64-bit binary) INTeger Integer format (signed, 2's complement format, 16-bit binary)
Setting example	:FORM ASC Sets ASCII as the data transfer format.
Response	{ASC|REAL|INT}
Query example	:FORM?
Response example	ASC The data transfer format is ASCII.

■ ASCII format

Data is represented by characters, and characters are transferred as ASCII codes.

Depending on the parameter, numerics are transferred in one of the following formats.

NR1	Integer (example: 123)
NR2	Decimal format without an exponent (example: 0.123456)
NR3	Decimal format with an exponent (example: 1.234567E-07)

When multiple numeric values are transferred, they are delimited with commas (,).

A message terminator (such as LF^EOI) is appended to the end.

■ Real number format

Data is transfered in 64-bit double-precision floating point format conforming to IEEE 754.

If there are multiple numeric data, they are all transferred in double-precision floating point format.

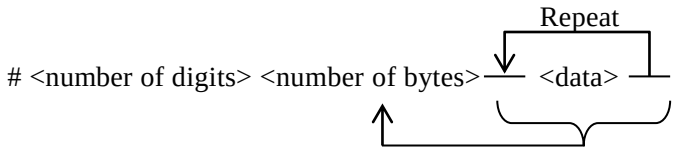

#	# is attached at the beginning.	ASCII
<number of digits>	Indicates the number of digits in the character string indicating the number of bytes (1 byte).	ASCII
<number of bytes>	Indicates the number of bytes of all data (a multiple of 8).	ASCII
<data>	A double-precision floating point number (8 bytes). From the most significant bit, the sign bit, an 11-bit exponent, and a 52-bit mantissa. Data is transferred in sequence from the most significant byte to the least significant byte.	Binary

When transferring multiple numeric data, the data is transferred continuously without delimiters (such as commas).

The structure above is for formulated length data blocks in IEEE 488.2. No message terminator is appended.

■ Integer format

Data is transferred in 16-bit signed integer format (–32,768 to +32,767).

If there are multiple numeric data, they are all transferred in 16-bit signed integer format.

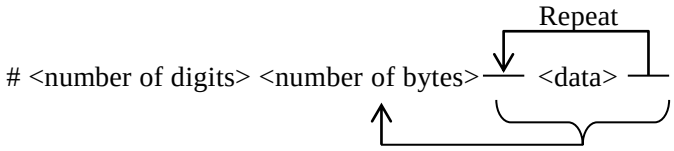

#	# is attached at the beginning.	ASCII
<number of digits>	Indicates the number of digits in the character string indicating the number of bytes (1 byte).	ASCII
<number of bytes>	Indicates the number of bytes of all data (an even number).	ASCII
<data>	16-bit signed integer (two's complement). Data is transferred in sequence from the most significant byte to the least significant byte.	Binary

When transferring multiple numeric data, the data is transferred continuously without delimiters (such as commas).

The structure above is for formulated length data blocks in IEEE 488.2. No message terminator is appended.

The actual value of parameters acquired in integer format can be obtained by the following expression. The same applies to 16-bit data recorded in the measurement data buffer.

Measured value = output data × 2^{-15} ×1.2×meter full scale (see below)

Parameter(s)	meter full scale
X, Y, R, NOISE	sensitivity/enlargement ratio (EXPAND)
RATIO	2
dB	100 dB
%	200 %
%FS	100 %
AUX IN1	12.5 V / 1.2
AUX IN2	12.5 V / 1.2
θ	180 ° / 1.2 (If the converted result is greater or equal to 180°, 360° is subtracted to bring it within the range –180.000 to +179.999).
Frequency	(32-bit data, see below)

Proper measurement results cannot be obtained if the sensitivity setting specified when querying data recorded in the measurement data buffer differs from that specified for recording.

The 32-bit data (frequency) is split into two unsigned 16-bit integers (0 to 65,535) for transfer in the sequence: upper part, lower part. The actual value can be obtained by the following expression.

Frequency = $(A \times 2^{16} + B) \times 2^{-32} \times 300\text{kHz}$

:INITiate[:IMMediate]

Explanation	When recording to the measurement data buffer is enabled and the trigger system is in the idle state, the system transitions to the awaiting trigger state. Enabling measurement data buffer ☞ :DATA:FEED:CONTrol command
Setting example	:INIT Sets the awaiting trigger state.
Note	If the measurement data buffer becomes full during recording, the trigger system enters the idle state. Transition to the awaiting trigger state is not possible as long as the measurement data buffer remains full. As necessary, the buffer must be cleared. Clearing the measurement data buffer ☞ :DATA:DELete fcommand

:INPut[1]:COUPling {AC|DC}

:INPut[1]:COUPling?

Explanation	Sets/queries the signal input result method.
Parameter(s)	AC AC coupling (cutoff frequency approx. 0.1 Hz) DC DC coupling
Setting example	:INP:COUP AC Sets AC coupling.
Response	{AC|DC}
Query example	:INP:COUP?
Response example	AC Input is AC coupled.
Note	With current input, coupling takes place after current-voltage conversion.

:INPut[1]:FILTer:NOTCh1:FREQuency {50|60}

:INPut[1]:FILTer:NOTCh1:FREQuency?

Explanation	Sets/queries the notch filter (fundamental wave) center frequency.
	The notch filter removes power supply frequency noise.
Parameter(s)	{numeric, range {50|60} } Specifiable in Hz.
	50 50 Hz
	60 60 Hz
Setting example	:INP:FILT:NOTC:FREQ 60
	Sets the center frequency to 60 Hz.
Response	{numeric, format NR1, range {50|60} }
Query example	:INP:FILT:NOTC:FREQ?
Response example	60
	The center frequency is 60 Hz.

:INPut[1]:FILTer:NOTCh1[:STATe] {ON|OFF|1|0}

:INPut[1]:FILTer:NOTCh1[:STATe]?

Explanation	Sets/queries the notch filter (fundamental wave).
	The power supply fundamental wave (50 or 60 Hz) can be removed.
Parameter(s)	{ON|1} Enables the notch filter.
	{ON|0} Disables the notch filter (thru setting).
Setting example	:INP:FILT:NOTC ON
	Enables the notch filter.
Response	{1|0}
Query example	:INP:FILT:NOTC?
Response example	1
	The notch filter is enabled.

:INPut[1]:FILTer:NOTCh2[:STATe] {ON|OFF|1|0}

:INPut[1]:FILTer:NOTCh2[:STATe]?

Explanation	Sets/queries the notch filter (second harmonic).
	The power supply second harmonic (100 or 120 Hz) can be removed.
Parameter(s)	{ON|1} Enables the notch filter (second harmonic).
	{OFF|0} Disables the notch filter (second harmonic) (thru setting).
Setting example	:INP:FILT:NOTC2 ON
	Enables the notch filter (second harmonic).
Response	{1|0}
Query example	:INP:FILT:NOTC2?
Response example	1
	The notch filter (second harmonic) is enabled.

:INPut[1]:GAIN {IE6|IE8}

:INPut[1]:GAIN?

Explanation	Sets/queries the current-voltage conversion gain for current input.	
	For current input measurement, the I terminal is enabled with	
	the :ROUTe[1][:TERMinals] I command.	
Parameter(s)	IE6	Conversion gain 1 MV/A, 1 μAmax
	IE8	Conversion gain 100 MV/A, 10 nAmax
Setting example	:INP:GAIN IE6	
	Sets the current-voltage conversion gain to 1MV/A	
Response	{IE6|IE8}	
Query example	:INP:GAIN?	
Response example	IE6	
	The current-voltage conversion gain is 1MV/A.	
Note	This command cannot be used with the LI5645. An error will result.	

:INPut[1]:LOW {FLOat|GROund}

:INPut[1]:LOW?

Explanation	Sets/queries grounding of the signal input connector's outer conductor.	
Parameter(s)	FLOat	Sets the input connector's outer conductor to float.
	GROund	Grounds the input connector's outer conductor to the chassis.
Setting example	:INP:LOW FLO	
	Sets the input connector's outer conductor to float.	
Response	{FLO|GRO}	
Query example	:INP:LOW?	
Response example	FLO	
	The input connector's outer conductor is floating.	

:INPut[1]:OFFSet:AUTO {ON|OFF|1|0}

:INPut[1]:OFFSet:AUTO?

Explanation	Sets/queries the PSD input offset continuous auto adjustment function.
Parameter(s)	{ON|1} Enables continuous automatic adjustment of PSD input offset.
	{OFF|0} Disables continuous automatic adjustment of PSD input offset.
	The automatic adjustment setting is retained.
	To disable adjustment (the factory default setting),
	execute the :INPut[1]:OFFSet:RST command.
Setting example	:INP:OFFS:AUTO ON
	The PSD input offset is continuously automatically adjusted.
Response	{1|0}
Query example	:INP:OFFS:AUTO?
Response example	0
	Continuous automatic adjustment of PSD input offset disabled.

:INPut[1]:OFFSet:AUTO:ONCE

Explanation	PSD input offset is automatically adjusted just once.
Setting example	:INP:OFFS:AUTO:ONCE

:INPut[1]:OFFSet:RST

Explanation	Disables PSD input offset adjustment and restores the factory default setting.
	This sets :INPut[1]:OFFSet:AUTO OFF.
Setting example	:INP:OFFS:RST
	Disables PSD input offset adjustment.

:INPut[1]:OFFSet:STIMe <response time>

:INPut[1]:OFFSet:STIMe?

Explanation	Sets/queries response time for the PSD input offset continuous auto adjustment function.
Parameter(s)	<time constant> {numeric, range {200E-3|750E-3|3000E-3}, unit s}
	Rounding is applied to arbitrary values specified.
Setting example	:INP:OFFS:STIM 200E-3
	Sets the response time to 200ms.
Response	{numeric, format NR3}
Query example	:INP:OFFS:STIM?
Response example	2.000000E-01
	The response time is 200ms.

:INPut2:TYPE {SINusoid|TPOS|TNEG}

:INPut2:TYPE?

Explanation	Sets/queries the reference signal waveform.	
Parameter(s)	SINusoid	Sine wave (reference phase: point at which the rising slope intersects the average value.) Operation is the same with square or pulse waveforms, but phase may differ somewhat from that with the sine wave.
	TPOS	TTL level rising edge
	TNEG	TTL level falling edge
Setting example	:INP2:TYPE SIN	
	Sets sine wave as the reference signal waveform.	
Response	{SIN|TPOS|TNEG}	
Query example	:INP:TYPE?	
Response example	SIN	
	The reference signal waveform is sine wave.	

:MEMory:STATe:DELete <memory number>

Explanation	Clears the contents of the specified configuration memory.
Parameter(s)	<memory number> {numeric, range 1 to 9}
	An out-of-range value will result in an error.
Setting example	:MEM:STAT:DEL 1
	Clears the contents of configuration memory 1.
Note	Clearing configuration memory restores the factory default values.
	The memory name changes to “memory#N” (when N is the memory number).

:MEMory:STATe:DEFine "Name", <memory number>

:MEMory:STATe:DEFine? <memory number>

Explanation	Changes the name of the specified configuration memory.	
	Also queries the memory name of the specified configuration memory.	
Parameter(s)	<memory number> {numeric, range 1 - 9} An error results if range exceeded.	
	"Name"	Can be set as a string of alphanumerics of up to 8 characters. Characters allowed are {A to Z, a to z, 0 to 9, #, @, -, (space)}
Setting example	:MEM:STAT:DEF "name",5	
	Changes the current name setting of configuration memory 5 to "name".	
Response	"Name" alphanumerics, up to 8 characters	
Query example	:MEM:STAT:DEF? 5	
Response example	"name"	
	The memory name of configuration memory 5 is "name".	

:OUTPut[1][:STATe] {ON|OFF|1|0}

:OUTPut[1][:STATe]?

Explanation	Sets/queries the output state of the DATA1 terminal.
Parameter(s)	{ON|1} Enables output of the DATA1 terminal.
	{OFF|0} Disables output of the DATA1 terminal.
Setting example	:OUTP ON
	DATA1 terminal output is enabled.
Response	{1|0}
Query example	:OUTP?
Response example	1
	DATA1 terminal output is enabled.
Note	Display will continue showing output as enabled even when it is disabled.

:OUTPut2[:STATe] {ON|OFF|1|0}

:OUTPut2[:STATe]?

Explanation	Sets/queries the output state of the DATA2 terminal.
Parameter(s)	{ON|1} Enables output of the DATA2 terminal.
	{OFF|0} Disables output of the DATA2 terminal.
Setting example	:OUTP2 ON
	DATA2 terminal output is enabled.
Response	{1|0}
Query example	:OUTP2?
Response example	1
	DATA2 terminal output is enabled.
Note	Display will continue showing output as enabled even when it is disabled.

:OUTPut3[:STATe] {ON|OFF|1|0}

:OUTPut3[:STATe]?

Explanation	Sets/queries the output state of the DATA3 terminal.
Parameter(s)	{ON|1} Enables output of the DATA3 terminal.
	{OFF|0} Disables output of the DATA3 terminal.
Setting example	:OUTP3 ON
	DATA3 terminal output is enabled.
Response	{1|0}
Query example	:OUTP3?
Response example	1
	DATA3 terminal output is enabled.
Note	Display will continue showing output as enabled even when it is disabled.

:OUTPut4[:STATe] {ON|OFF|1|0}

:OUTPut4[:STATe]?

Explanation	Sets/queries the output state of the DATA4 terminal.	
Parameter(s)	{ON|1}	Enables output of the DATA4 terminal.
	{OFF|0}	Disables output of the DATA4 terminal.
Setting example	:OUTP4 ON	
	DATA4 terminal output is enabled.	
Response	{1|0}	
Query example	:OUTP4?	
Response example	1	
	DATA4 terminal output is enabled.	
Note	Display will continue showing output as enabled even when it is disabled.	

:ROUTe[1][:TERMinals] {A|AB|I}

:ROUTe[1][:TERMinals]?

Explanation	Sets/queries the signal input connector.	
Parameter(s)	A	single end voltage (terminal A, 1 V max)
	AB	Differential voltage (terminal A-B, 1 V max)
	I	Current (terminal I, 1 μAmax when conversion gain is 1MV/A 10 nAmax when conversion gain is 100MV/A)
Setting example	:ROUT AB	
	Sets the terminal A-B differential voltage as the input signal.	
Response	{A|AB|I}	
Query example	:ROUT?	
Response example	AB	
	The input signal is the terminal A-B differential voltage.	
Note	Signal input connector I cannot be selected with the LI5645.	

:ROUTe2[:TERMinals] {RINPut|IOSC|SINPut}

:ROUTe2[:TERMinals]?

Explanation	Sets/queries the reference signal source.	
Parameter(s)	RINPut	REFERENCE INPUT Connector
	IOSC	Internal oscillator
	SINPut	SIGNAL input connector
Setting example	:ROUT2 RINP	
	Sets the reference signal source to the REFERENCE INPUT connector.	
Response	{RINP|IOSC|SINP}	
Query example	:ROUT2?	
Response example	RINP The reference signal source is the REFERENCE INPUT connector.	

[:SENSe]:AUTO:ONCE

Explanation	Automatically sets the sensitivity and time constant once to match the reference signal for the signal being measured at the time.
	This corresponds to the panel operation AUTO → [MEASURE].
Setting example	:AUTO:ONCE
	Performs auto setting one time.

[:SENSe]:CURRent[1]:AC:RANGe:AUTO {ON|OFF|1|0}

[:SENSe]:CURRent[1]:AC:RANGe:AUTO?

Explanation	Sets/queries the current sensitivity continuous automatic selection function.
	When current sensitivity is set automatically, dynamic reserve is also set automatically.
Parameter(s)	{ON|1} Enables continuous automatic selection of current sensitivity.
	{OFF|0} Disables continuous automatic selection of current sensitivity.
Setting example	:CURR:AC:RANG:AUTO ON
	Continuous automatic selection of current sensitivity is enabled.
Response	{1|0}
Query example	:CURR:AC:RANG:AUTO?
Response example	0
	Continuous automatic selection of current sensitivity is disabled.
Note	This command cannot be used with the LI5645. An error will result.
	With voltage input, the voltage sensitivity is set automatically.

[:SENSe]:CURRent[1]:AC:RANGe:AUTO:ONCE

Explanation	Automatically set current sensitivity one time.
	When current sensitivity is set automatically, dynamic reserve is also set automatically.
Setting example	:CURR:AC:RANG:AUTO:ONCE
	Automatically sets current sensitivity one time.
Note	This command cannot be used with the LI5645. An error will result.
	With voltage input, the voltage sensitivity is set automatically.

[:SENSe]:CURRent[1]:AC:RANGe[:UPPer] <current sensitivity>
[:SENSe]:CURRent[1]:AC:RANGe[:UPPer]?

Explanation	Sets/queries the current sensitivity (primary PSD).
Parameter(s)	<current sensitivity> {numeric, range {10E-15|20E-15|..|1E-6}, unit Arms} Rounding is applied to arbitrary values specified. The unit A can be used. Current sensitivity is the product of the current-voltage conversion gain and the voltage sensitivity. The range of current sensitivity that can be selected is dependent on the current-voltage conversion gain that is set with the ROUT[1] command. 1MV/A 100E-15(1E-12) to 1E-6 A 100MV/A 10E-15(100E-15) to 10E-9 A Values in parentheses apply when DATA1 is NOISE.
Setting example	:CURR:AC:RANG 1E-9 Sets current sensitivity (full scale) to 1nA.
Response	<current sensitivity> : {numeric, format NR3, unit A}
Query example	:CURR:AC:RANG?
Response example	1.000000E-09 Current sensitivity (full scale) is 1nA.
Note	This command cannot be used with the LI5645. An error will result. When in dual mode, the current sensitivity of the secondary PSD is changed to match that of the primary PSD if the sensitivity set for the primary PSD is lower than that of the secondary PSD.

[:SENSe]:CURRent2:AC:RANGe[:UPPer] <current sensitivity>
[:SENSe]:CURRent2:AC:RANGe[:UPPer]?

Explanation	Sets/queries the current sensitivity (secondary PSD).
Parameter(s)	<current sensitivity> {numeric, range {10E-15|20E-15|..|1E-6}, unit Arms} Rounding is applied to arbitrary values specified. The unit A can be used. Current sensitivity is the product of the current-voltage conversion gain and the voltage sensitivity. The range of current sensitivity that can be selected is dependent on the current-voltage conversion gain that is set with the ROUT[1] command. 1MV/A 100E-15(1E-12) to 1E-6 A 100MV/A 10E-15(100E-15) to 10E-9 A Values in parentheses apply when DATA1 is NOISE.
Setting example	:CURR2:AC:RANG 1E-9 Sets current sensitivity (full scale) to 1nA.
Response	<current sensitivity> : {numeric, format NR3}
Query example	:CURR2:AC:RANG?
Response example	1.000000E-09 Secondary PSD current sensitivity (full scale) is 1nA.
Note	This command cannot be used with the LI5645. An error will result. When in dual mode, the current sensitivity of the secondary PSD cannot be set to a higher level than that of the primary PSD. An error will result.

[:SENSe]:DATA <measurement data>

[:SENSe]:DATA?

Explanation: Sets/queries measurement data sets that are read by the :FETCh? query.

Parameter(s): <measurement data>

{numeric, range 0 to 63}

1	STATUS (16 bits = 1 word) Reads the measurement status. Measurement status content ☞ :FETCh? command
2	DATA1 (16 bits = 1 word) Reads the value of DATA1.
4	DATA2 (16 bits = 1 word) Reads the value of DATA2.
8	DATA3 (16 bits = 1 word) Reads the value of DATA3.
16	DATA4 (16 bits = 1 word) Reads the value of DATA4.
32	FREQ (32 bits = 2 words) Records the frequency value. The fundamental wave or primary frequency is read when the detection mode is SINGLE, DUAL1, or DUAL2, and the secondary frequency is read when the detection mode is CASCADE.

When reading multiple measurement data simultaneously, a maximum of 5 words can be selected. It is not possible to select the same parameter more than once.

Data is read starting with the smallest value. It is not possible to change the reading sequence. Nothing is read if 0 is set.

Setting example: :DATA 7

Sets the measurement data set to STATUS, DATA1, and DATA2.

Response: {numeric, format NR1, range 0 to 63}

Query example: :DATA?

Response example: 7

The measurement data is STATUS, DATA1, and DATA2.

[:SENSe]:DETector[:FUNCtion] {SINGle|DUAL1|DUAL2|CASCade}

[:SENSe]:DETector[:FUNCtion]?

Explanation	Sets/queries the detection mode.	
Parameter(s)	SINGle	1 frequency × 2 phases (single mode) Only the primary PSD is used. Measure at fundamental wave F or harmonic (n/m) F of fundamental wave.
	DUAL1	2 frequencies × 2 phases (2-frequency harmonic mode) primary PSD: Fundamental wave F or fundamental wave harmonic (n/m) F Secondary PSD: Fundamental wave F or fundamental wave harmonic nF
	DUAL2	2 frequencies × 2 phases (2-frequency independent mode) primary PSD: primary frequency Fp Secondary PSD: secondary frequency Fs
	CASCade	2-frequency cascade connection (2-frequency cascade mode) primary PSD: primary frequency Fp Secondary PSD: secondary frequency Fs Further detection on the detection result Xp of Fp is performed using secondary frequency Fs.

Dual mode

Setting example	:DET DUAL2 Sets the DUAL2 detection mode.
Response	{SING|DUAL1|DUAL2|CASC}
Query example	:DET?
Response example	DUAL2 The detection mode is DUAL2.
Note	This command cannot be used with the LI 5645. LI 5645 is fixed in SINGle.

[:SENSe]:DREServe {HIGH|MEDium|LOW}

[:SENSe]:DREServe?

Explanation	Sets/queries dynamic reserve.	
Parameter(s)	HIGH	High dynamic reserve (when noise level is high)
	MEDium	Medium dynamic reserve
	LOW	Low dynamic reserve (when noise level is low)

Setting example	:DRES LOW Sets low dynamic reserve.
Response	{HIGH|MED|LOW}
Query example	:DRES?
Response example	LOW The dynamic reserve level is LOW.

[:SENSe]:FILTer[1][:LPASs]:AUTO:ONCE

Explanation	Automatically sets the filter time constant according to frequency. When the synchronous filter is selected, switching to the time constant filter takes place automatically. The attenuation slope will be 24 dB/oct.
Setting example	:FILT:AUTO:ONCE Automatically sets the filter time constant.

[:SENSe]:FILTer[1][:LPASs]:SLOPe {6|12|18|24}

[:SENSe]:FILTer[1][:LPASs]:SLOPe?

Explanation	Sets/queries the filter attenuation slope (primary PSD).
Parameter(s)	{numeric, range {6|12|18|24}, unit dB/oct}
Setting example	:FILT:SLOP 24 Sets the filter attenuation slope to 24 dB/oct.
Response	{numeric, format NR1}
Query example	:FILT:SLOP?
Response example	24 The filter attenuation slope is 24 dB/oct.

[:SENSe]:FILTer[1][:LPASs]:TCONstant <time constant>

[:SENSe]:FILTer[1][:LPASs]:TCONstant?

Explanation	Sets/queries the filter time constant (primary PSD).
Parameter(s)	<time constant> {numeric, range 5E-6 to 50E+3 1-2-5 sequence, unit s} Rounding is applied to arbitrary values specified.
Setting example	:FILT:TCON 10E-3 Sets the filter time constant to 10 ms.
Response	{numeric, format NR3}
Query example	:FILT:TCON?
Response example	1.000000E-02 Filter time constant is 10ms.

[:SENSe]:FILTer[1][:LPASs]:TYPE {EXPonential|MOVing}

[:SENSe]:FILTer[1][:LPASs]:TYPE?

Explanation	Sets/queries the filter type.
Parameter(s)	EXPonential Time constant filter MOVing Synchronous filter (moving average type)
Setting example	:FILT:TYPE MOV Sets the synchronous filter.
Response	{EXP|MOV}
Query example	:FILT:TYPE?
Response example	MOV Synchronous filter is set.

[:SENSe]:FILTer2[:LPASs]:SLOPe {6|12|18|24}

[:SENSe]:FILTer2[:LPASs]:SLOPe?

Explanation	Sets/queries the filter attenuation slope (secondary PSD).
Parameter(s)	{numeric, range {6|12|18|24}, unit dB/oct}
Setting example	:FILT2:SLOP 24
	Sets the filter attenuation slope to 24 dB/oct.
Response	{numeric, format NR1}
Query example	:FILT2:SLOP?
Response example	24
	The filter attenuation slope is 24 dB/oct.
Note	This command cannot be used with the LI5645. An error will result.

[:SENSE]:FILTer2[:LPASs]:TCONstant <time constant>

[:SENSe]:FILTer2[:LPASs]:TCONstant?

Explanation	Sets/queries the filter time constant (secondary PSD).
Parameter(s)	<time constant> {numeric, range 5E−6 to 50E+3 1-2-5 sequence, unit s}
	The unit S can be used.
Setting example	:FILT2:TCON 1E−3
	Sets the filter time constant to 1 ms.
Response	{numeric, format NR3}
Query example	:FILT2:TCON?
Response example	1.000000E−03
	Filter time constant is 1ms.
Note	This command cannot be used with the LI5645. An error will result.

[:SENSE]:FILTer2[:LPASs]:TYPE {EXPonential|MOVing}

[:SENSe]:FILTer2[:LPASs]:TYPE?

Explanation	Sets/queries the filter type (secondary PSD).
Parameter(s)	EXPonential Time constant filter
	MOVing Synchronous filter (moving average type)
Setting example	:FILT2:TYPE MOV
	Sets the synchronous filter.
Response	{EXP|MOV}
Query example	:FILT2:TYPE?
Response example	MOV
	Synchronous filter is set.
Note	This command cannot be used with the LI5645. An error will result.

[:SENSe]:FREQuency[1]?

Explanation	Queries the frequency (Fp fundamental wave, primary frequency).
Response	<frequency>
	{numeric, format NR3, range 5.0E−4 to 2.6E+5, resolution 7 digits, unit Hz}
Query example	:FREQ?
Response example	1.234567E+05
	The frequency is 123.4567 kHz.
Note	When harmonics measurement is enabled, harmonic order = n,
	and subharmonic order = m, then
	actual measurement frequency = response value × n / m (primary PSD)
	= response value × n (secondary PSD)

[:SENSe]:FREQuency[1]:HARMonics {ON|OFF|1|0}

[:SENSe]:FREQuency[1]:HARMonics?

Explanation	Sets/queries harmonics measurement (enabled or disabled) (primary PSD).
Parameter(s)	{ON|1} Enables harmonics measurement.
	{OFF|0} Disables harmonics measurement.
Setting example	:FREQ:HARM ON
	Enables harmonics measurement.
Response	{1|0}
Query example	:FREQ:HARM?
Response example	1
	harmonics measurement is enabled.

[:SENSe]:FREQuency[1]:MULTiplier <harmonic order>

[:SENSe]:FREQuency[1]:MULTiplier?

Explanation	Sets/queries the harmonic order n for measurement (primary PSD).
	The signal that has n times frequency of the reference signal can be measured.
	Harmonics measurement must be enabled with the
	[:SENSe]:FREQuency[1]:HARMonics ON command.
Parameter(s)	<harmonic order> {numeric, range 1 to 63}
Setting example	:FREQ:MULT 2
	Sets the harmonic order to 2.
Response	{numeric, format NR1}
Query example	:FREQ:MULT?
Response example	2
	The harmonic order is 2.
Note	When harmonic order n and subharmonic order m are set, fractional harmonic n / m is measured. When measuring the n-th harmonic, set sub-harmonic order m = 1 (the default value). When measuring the 1/m-th subharmonic, set harmonic order n = 1 (the default value).

[:SENSe]:FREQuency[1]:SMULtiplier <subharmonic order>

[:SENSe]:FREQuency[1]:SMULtiplier?

Explanation	Sets/queries the subharmonic order m for measurement (primary PSD). The signal that is 1/m-th the reference signal can be measured. Harmonics measurement must be enabled with the [:SENSe]:FREQuency[1]:HARMonics ON command.
Parameter(s)	<subharmonic order> {numeric, range 1 to 63}
Setting example	:FREQ:MULT 7 Sets the subharmonic order to 7.
Response	numeric, format NR1}
Query example	:FREQ:SMUL?
Response example	7 The subharmonic order is 7.

[:SENSe]:FREQuency2?

Explanation	Queries the secondary frequency used with detection modes DUAL2 and CASCADE.
Response	<Frequency> {numeric, range 5.0E−4 to 2.6E+5, resolution 7 digits, unit Hz}
Query example	:FREQ2?
Response example	1.000000E+05 The secondary frequency is 100 kHz.
Note	This command cannot be used with the LI5645. An error will result.

[:SENSe]:FREQuency2:HARMonics {ON|OFF|1|0}
[:SENSe]:FREQuency2:HARMonics?

Explanation	Sets/queries harmonic measurement (enabled or disabled) (secondary PSD).
Parameter(s)	{ON|1} Enables harmonics measurement. {OFF|0} Disables harmonics measurement.
Setting example	:FREQ2:HARM ON Enables secondary PSD harmonic measurement.
Response	{1|0}
Query example	:FREQ2:HARM?
Response example	1 Secondary PSD harmonic measurement is enabled.
Note	This command cannot be used with the LI5645. An error will result. Secondary PSD harmonic measurement is forcibly disabled in detection modes other than DUAL1.

[:SENSe]:FREQuency2:MULTiplier <harmonic order>
[:SENSe]:FREQuency2:MULTiplier?

Explanation	Sets/queries harmonic order n for measurement in detection mode DUAL1 (secondary PSD). The signal that is n times frequency of the reference signal can be measured. Harmonics measurement must be enabled with the [:SENSe]:FREQuency2:HARMonics ON command.
Parameter(s)	<harmonic order> {numeric, range 1 to 63}
Setting example	:FREQ2:MULT 2 Sets the harmonic order to 2.
Response	{numeric, format NR1}
Query example	:FREQ2:MULT?
Response example	2 The harmonic order is 2.
Note	This command cannot be used with the LI5645. An error will result.

[:SENSe]:NOISe[:SMOothing][:APERture] {1|4|16|64}

[:SENSe]:NOISe[:SMOothing][:APERture]?

Explanation	Sets/queries the output smoothing coefficient for noise density measurement. Setting the coefficient to 4 roughly halves variations in output, but roughly quadruples response time.
Parameter(s)	{numeric, range {1|4|16|64}}
Setting example	:NOIS 16 Sets the output smoothing coefficient to 16.
Response	{numeric, format NR1}
Query example	:NOIS?
Response example	16 The output smoothing coefficient is 16.

[:SENSe]:PHASe[1] <phase shift amount>

[:SENSe]:PHASe[1]?

Explanation	Sets/queries the phase shift amount (primary PSD).
Parameter(s)	<phase shift amount> {numeric, range –180.000 to +179.999, resolution 0.001, unit °} Values in the range ± 720° are accepted, but are normalized to the range indicated above. An error results if a value outside the range ± 720° is specified.
Setting example	:PHAS 90 Sets the phase shift amount to 90°.
Response	{numeric, format NR3}
Query example	:PHAS?
Response example	9.000000E+01 The phase shift amount is 90°.

[:SENSe]:PHASe[1]:AUTO:ONCE

Explanation	Automatically adjusts the phase shift amount so that phase θ (primary PSD) becomes zero.
Setting example	:PHAS:AUTO:ONCE Performs automatic phase adjustment.
Note	Upon making θ = 0, the signal amplitude can be determined from X. Since Y becomes 0, the phase change can be determined from Y.

[:SENSe]:PHASe2 <phase shift amount>

[:SENSe]:PHASe2?

Explanation	Sets/queries the phase shift amount (secondary PSD).
Parameter(s)	<phase shift amount> {numeric, range –180.000 to +179.999, resolution 0.001, unit °} Values in the range ± 720° are accepted, but are normalized to the range indicated above. An error results if a value outside the range ± 720° is specified.
Setting example	:PHAS2 90 Sets the phase shift amount to 90°.
Response	{numeric, format NR3}
Query example	:PHAS2?
Response example	9.000000E+01 The phase shift amount is 90°.
Note	This command cannot be used with the LI5645. An error will result.

[:SENSe]:PHASe2:AUTO:ONCE

Explanation	Automatically adjusts the phase shift amount so that phase θ (secondary PSD) becomes zero.
Setting example	:PHAS2:AUTO:ONCE Performs automatic phase adjustment.

[:SENSe]:ROSCillator:SOURce {INTernal|EXTernal}

[:SENSe]:ROSCillator:SOURce?

Explanation	Sets/queries the reference frequency source for frequency synthesis.
Parameter(s)	INTernal internal EXTernal external (10 MHz IN terminal)
Setting example	:ROSC:SOUR EXT The reference frequency source is set to external.
Response	{INT|EXT}
Query example	:ROSC:SOUR?
Response example	INT The reference frequency source is internal.
Note	Even when the reference frequency source is set to external, operation continues with the internal reference frequency source until a 10 MHz signal is applied to the 10 MHz IN terminal. ☞ "6.4 Operation status"

[:SENSe]:VOLTage[1]:AC:RANGe:AUTO {ON|OFF|1|0}

[:SENSe]:VOLTage[1]:AC:RANGe:AUTO?

Explanation	Sets/queries the voltage sensitivity continuous automatic selection function. When voltage sensitivity is set automatically, dynamic reserve is also set automatically.
Parameter(s)	{ON|1} Enables continuous automatic selection of voltage sensitivity. {OFF|0} Disables continuous automatic selection of voltage sensitivity.
Setting example	:VOLT:AC:RANG:AUTO ON Continuous automatic selection of voltage sensitivity is enabled.
Response	{1|0}
Query example	:VOLT:AC:RANG:AUTO?
Response example	0 Continous automatic selection of voltage sensitivity is disabled.
Note	With current input of LI5650, the current sensitivity is set automatically.

[:SENSe]:VOLTage[1]:AC:RANGe:AUTO:ONCE

Explanation	Automatically set voltage sensitivity one time. When voltage sensitivity is set automatically, dynamic reserve is also set automatically.
Setting example	:VOLT:AC:RANG:AUTO:ONCE Automatically sets voltage sensitivity one time.
Note	With current input of LI5650, the current sensitivity is set automatically.

[:SENSe]:VOLTage[1]:AC:RANGe[:UPPer] <sensitivity>

[:SENSe]:VOLTage[1]:AC:RANGe[:UPPer]?

Explanation	Sets/queries the voltage sensitivity (primary PSD).
Parameter(s)	<sensitivity> : {numeric, range 10E–9 to 1 1-2-5 sequence, unit Vrms}
	Rounding is applied to arbitrary values specified.
	The unit V can be used.
Setting example	:VOLT:AC:RANG 1E–3
	Sets voltage sensitivity to 1 mV.
Response	{numeric, format NR3, range {same as setting range}, unit Vrms}
Query example	:VOLT:AC:RANG?
Response example	1.000000E–03
	Voltage sensitivity is 1 mV.
Note	Disabled when using current input of LI5650.
	When in dual detector mode of LI5650, the voltage sensitivity of the secondary PSD is changed to match that of the primary PSD if the sensitivity set for the primary PSD is lower than that of the secondary PSD.
	When NOISE is selected with DATA1, the sensitivity setting range is {20E–9 to 1}

[:SENSe]:VOLTage2:AC:RANGe[:UPPer] <sensitivity>

[:SENSe]:VOLTage2:AC:RANGe[:UPPer]?

Explanation	Sets/queries the voltage sensitivity (secondary PSD).
Parameter(s)	<sensitivity> {numeric, range : same as primary PSD, unit Vrms}
	Range is the same as with [:SENSe]:VOLTage[1]:AC:RANGe[:UPPer].
	The unit V can be used.
Setting example	:VOLT2:AC:RANG 1E–3
	Sets voltage sensitivity to 1 mV.
Response	{numeric, format NR3, range {same as setting range}, unit Vrms}
Query example	:VOLT2:AC:RANG?
Response example	1.000000E–03
	Voltage sensitivity is 1 mV.
Note	This command cannot be used with the LI5645. An error will result.
	Disabled when using current input of LI5650.
	When in dual detector mode of LI 5650, the voltage sensitivity of the secondary PSD cannot be set to a higher level than that of the primary PSD. An error will result.

[:SENSe]:VOLTage5[:DC]:STATe {ON|OFF|1|0}

[:SENSe]:VOLTage5[:DC]:STATe?

Explanation	Sets/queries the AUX IN 1 terminal state (enabled or disabled).
Parameter(s)	{ON|1} Enables voltage measurement for the AUX IN 1 terminal.
	{OFF|0} Disables voltage measurement for the AUX IN 1 terminal.
Setting example	:VOLT5:STAT ON
	Enables voltage measurement for the AUX IN 1 terminal.
Response	{1|0}
Query example	:VOLT5:STAT?
Response example	1
	Enables voltage measurement for the AUX IN 1 terminal.
Note	When voltage measurement is disabled, the display shows 0.000V.

[:SENSe]:VOLTage5[:DC]:TCONstant <time constant>

[:SENSe]:VOLTage5[:DC]:TCONstant?

Example	Sets/queries the AUX IN 1 filter time constant.
Parameter(s)	<time constant>
	THRU Sets the filter OFF.
	{numeric, range : {2E-3|500E-6|125E-6}, unit s}
	Rounding is applied to arbitrary values specified.
	The unit S can be used.
	Cutoff frequencies are, respectively, about 80 Hz, 320 Hz, and 1.27 kHz.
Setting example	:VOLT5[:DC]:TCON 2E-3
	Sets the AUX IN 1 filter time constant to 2 ms.
Response	THRU or {numeric, format NR3}
Query example	:VOLT5[:DC]:TCON?
Response example	THRU
	AUX IN 1 filter is OFF.

[:SENSe]:VOLTage6[:DC]:STATe {ON|OFF|1|0}

[:SENSe]:VOLTage6[:DC]:STATe?

Explanation	Sets/queries the AUX IN 2 terminal state (enabled or disabled).
Parameter(s)	{ON|1} Enables voltage measurement for the AUX IN 2 terminal.
	{OFF|0} Disables voltage measurement for the AUX IN 2 terminal.
Setting example	:VOLT6:STAT ON
	Enables voltage measurement for the AUX IN 2 terminal.
Response	{1|0}
Query example	:VOLT6:STAT?
Response example	1
	Enables voltage measurement for the AUX IN 2 terminal.
Note	When voltage measurement is disabled, the display shows 0.000V.

[:SENSe]:VOLTage6[:DC]:TCONstant <time constant>

[:SENSe]:VOLTage6[:DC]:TCONstant?

Example	Sets/queries the AUX IN 2 filter time constant.
Parameter(s)	<time constant>
	THRU Sets the filter OFF.
	{numeric, range : {2E-3|500E-6|125E-6}, unit s}
	The unit S can be used.
	Cutoff frequencies are, respectively, about 80 Hz, 320 Hz, and 1.27 kHz.
Setting example	:VOLT6[:DC]:TCON 2E-3
	Sets the AUX IN 2 filter time constant to 2 ms.
Response	THRU or {numeric, format NR3}
Query example	:VOLT6[:DC]:TCON?
Response example	2.000000E-03
	The AUX IN 2 filter time constant is 2ms.

:SOURce:FREQuency[1][:CW] <frequency>

:SOURce:FREQuency[1][:CW]?

Explanation	Sets/queries the internal oscillator (primary PSD) frequency.
Parameter(s)	<frequency> {numeric, range 5E−4 to 2.6E+5, resolution 6 digits (0.1 mHz under 100 Hz), unit Hz} Suffixes M (10^{-3}), K(10^{3}) and MA (10^{6}), unit HZ can be used. Example: 1KHZ (＝1E3).
Setting example	:SOUR:FREQ 1000 Sets the internal oscillator frequency to 1 kHz.
Response	{numeric, format NR3}
Query example	:SOUR:FREQ?
Response example	1.000000E+03 The internal oscillator frequency is 1.000000E+03 Hz (1 kHz).
Note	Depending on the selected reference signal source and detection mode, the actual frequency (fundamental wave, primary frequency) may differ from that set. Querying the frequency (fundamental wave, primary frequency) ☞ [:SENSe]:FREQuency[1]? command

:SOURce:FREQuency2[:CW] <frequency>

:SOURce:FREQuency2[:CW]?

Explanation	Sets/queries the internal oscillator (secondary PSD) frequency used with detection modes DUAL2 and CASCADE.
Parameter(s)	<frequency> {numeric, range 5E−4 to 2.6E+5, resolution 6 digits (0.1 mHz under 100 Hz), unit Hz} Suffixes M (10^{-3}), K(10^{3}) and MA (10^{6}), unit HZ can be used. Example: 1KHZ (＝1E3).
Setting example	:SOUR:FREQ2 1E+5 Sets the internal oscillator frequency to 100 kHz.
Response	{numeric, format NR3}
Query example	:SOUR:FREQ2?
Response example	1.000000E+05 The internal oscillator frequency is 1.000000E+05 Hz (100 kHz).
Note	This command cannot be used with the LI5645. An error will result. Depending on the selected reference signal source and detection mode, the actual frequency (secondary frequency) may differ from that set. Querying the secondary frequency ☞ [:SENSe]:FREQuency2? command

:SOURce:IOSCillator {PRImary|SECondary}

:SOURce:IOSCillator?

Explanation	Sets/queries the oscillator output from the OSC OUT terminal.
Parameter(s)	PRImary Sets the primary PSD oscillator.
	SECondary Sets the secondary PSD oscillator. Setting takes effect when detection mode is DUAL2, CASCADE.
Setting example	:SOUR:IOSC PRI
	Sets output to the primary PSD oscillator.
Response	{PRI|SEC}
Query example	:SOUR:IOSC?
Response example	SEC
	Secondary PSD oscillator.
Note	This command cannot be used with the LI5645. An error will result.
	Querying the primary PSD oscillator frequency
	☞ [:SENSe]:FREQuency[1]? command
	Querying the secondary PSD oscillator frequency
	☞ [:SENSe]:FREQuency2? command

:SOURce:VOLTage[:LEVel][:IMMediate][:AMPLitude] <amplitude>

:SOURce:VOLTage[:LEVel][:IMMediate][:AMPLitude]?

Explanation	Sets/queries the internal oscillator output voltage AC amplitude.
Parameter(s)	<amplitude> {numeric, range 0.00000 to 1.000, setting resolution 4 digits (at output voltage range full scale), unit Vrms}
	Suffix M (10^{-3}), unit V, MAX, and MIN can be used.
	Example: 100M (= 0.1)
Setting example	:SOUR:VOLT 0.5
	Sets output voltage amplitude to 0.5 V.
Response	{numeric, format NR3}
Query example	:SOUR:VOLT?
Response example	5.000000E-01
	Output voltage amplitude is 0.5 V.
Note	Values exceeding the output voltage range cannot be set.
	☞ :SOURce:VOLTage:RANGe command

:SOURce:VOLTage:RANGe <voltage range>

:SOURce:VOLTage:RANGe?

Explanation	Sets/queries the internal oscillator output voltage range.
Parameter(s)	<voltage range> {numeric, range {10E-3|100E-3|1}, unit V}
	Rounding is applied to arbitrary values specified.
	Suffix M (10^{-3}), unit V, MAX, and MIN can be used.
	Example: 100M (= 0.1), 500MV (= 0.5)
Setting example	:SOUR:VOLT:RANG 100E-3
	Sets the output voltage range to 100mV.
Response	<voltage range> : {numeric, format NR3, unit V}
Query example	:SOUR:VOLT:RANG?
Response example	1.000000E-01
	Output voltage range is 100 mV.
Note	Raising the output voltage range does not change the output voltage amplitude, but it does discard any part below the minimum resolution.
	If reducing the output voltage range would cause the output voltage amplitude setting to go out of range, it is set to the range maximum.

:SOURce5:VOLTage[:LEVel][:IMMediate]:OFFSet <DC voltage>

:SOURce5:VOLTage[:LEVel][:IMMediate]:OFFSet?

Explanation	Sets/queries the AUX OUT 1 output voltage.
Parameter(s)	<DC voltage>
	{numeric, range –10.5 to +10.5, resolution 0.001 digits, unit V}
	Suffix M (10^{-3}), unit V, MAX, and MIN can be used.
	Example: 500MV (= 0.5)
Setting example	:SOUR5:VOLT:OFFS 2.5
	Sets AUX OUT 1 output voltage to +2.5 V.
Response	{numeric, format NR3}
Query example	:SOUR5:VOLT:OFFS?
Response example	2.500000E+00
	The AUX OUT 1 output voltage is +2.5 V.

:SOURce6:VOLTage[:LEVel][:IMMediate]:OFFSet <DC voltage>

:SOURce6:VOLTage[:LEVel][:IMMediate]:OFFSet?

Explanation	Sets/queries the AUX OUT 2 output voltage.
Parameter(s)	<DC voltage>
	{numeric, range –10.5 to +10.5, resolution 0.001 digits, unit V}
	Suffix M (10^{-3}), unit V, MAX, and MIN can be used.
	Example: 500MV (= 0.5)
Setting example	:SOUR6:VOLT:OFFS –2.5
	Sets the AUX OUT 1 output voltage to –2.5V.
Response	{numeric, format NR3}
Query example	:SOUR6:VOLT:OFFS?
Response example	–2.500000E+00
	The AUX OUT 2 output voltage is –2.5V.

Operation status details

☞ "6.4 Operation status"

:STATus:OPERation:CONDition?

Explanation	Queries the Operation Condition register (OPCR).
Response	{numeric, format NR1, range 0 to 65535}
Query example	:STAT:OPER:COND?
Response example	0
	The Operation Condition register contains 0.

:STATus:OPERation:ENABle <mask>

:STATus:OPERation:ENABle?

Explanation	Sets/queries the Operation Event Enable register (OPEE).
Parameter(s)	<mask> {numeric, range 0 to 65535} An error results if range exceeded.
	Regardless of the value specified, the uppermost bit of the 16-bit binary value is 0.
Setting example:	:STAT:OPER:ENAB 0
	Disables occurrence of operation events.
Response	{numeric, format NR1, range 0 to 65535}
Query example	:STAT:OPER:ENAB?
Response example	0
	The Operation Condition register contains 0 (all disabled).

:STATus:OPERation[:EVENt]?

Explanation	Queries the Operation Event register (OPER).
Response	{numeric, format NR1, range 0 to 65535}
Query example	:STAT:OPER?
Response example	0
	The Operationable Event register contains 0 (no event).

:STATus:OPERation:NTR <filter>

:STATus:OPERation:NTR?

Explanation	Sets/queries the Operation Status Negative Transition Filter.
Parameter(s)	<filter> {numeric, range 0 to 65535}
Setting example	:STAT:OPER:NTR 256
	Sets bit 8 of the Operation Status Negative Transition Filter to 1.
Response	{numeric, format NR1, range 0 to 65535}
Query example	:STAT:OPER:NTR?
Response example	256
	Bit 8 of the Operation Status Negative Transition Filter is set to 1.

:STATus:OPERation:PTR <filter>

:STATus:OPERation:PTR?

Explanation	Sets/queries the Operation Status Positive Transition Filter.
Parameter(s)	<filter> {numeric, range 0 to 65535}
Setting example	:STAT:OPER:PTR 256
	Sets bit 8 of the Operation Status Positive Transition Filter to 1.
Response	{numeric, format NR1, range 0 to 65535}
Query example	:STAT:OPER:PTR?
Response example	256
	Bit 8 of the Operation Status Positive Transition Filter is set to 1.

Questionable Status details

☞ "6.5 Questionable Status"

:STATus:QUEStionable:CONDition?

Explanation	Queries the Questionable Condition register (QUCR).
Response	{numeric, format NR1, range 0 to 65535}
Query example	:STAT:QUES:COND?
Response example	0
	The Questionable Condition register contains 0.

:STATus:QUEStionable:ENABle <mask>
:STATus:QUEStionable:ENABle?

Explanation	Sets/queries the Questionable Event Enable register (QUEE).
Parameter(s)	<mask> {numeric, range 0 to 65535} An error results if range exceeded.
	Regardless of the value specified, the uppermost bit of the 16-bit binary value is 0.
Setting example	:STAT:QUES:ENAB 0
	Inhibits occurrence of all questionable events.
Response	{numeric, format NR1, range 0 to 65535}
Query example	:STAT:QUES:ENAB?
Response example	0
	The Questionable Event Enable register contains 0 (all disabled).

:STATus:QUEStionable[:EVENt]?

Explanation	Queries the Questionable Event register (QUER).
Response	{numeric, format NR1, range 0 to 65535}
Query example	:STAT:QUES?
Response example	0
	The Questionable Event register contains 0 (no event).

:STATus:QUEStionable:NTR <filter>

:STATus:QUEStionable:NTR?

Explanation	Sets/queries the Questionable Status Negative Transition Filter.
Parameter(s)	<filter> {numeric, range 0 to 65535}
Setting example	:STAT:OPER:NTR 64
	Sets bit 6 of the Questionable Status Negative Transition Filter to 1.
Response	{numeric, format NR1, range 0 to 65535}
Query example	:STAT:QUES:NTR?
Response example	64
	Bit 6 of the Questionable Status Negative Transition Filter is set to 1.

:STATus:QUEStionable:PTR <filter>

:STATus:QUEStionable:PTR?

Explanation	Sets/queries the Questionable Status Positive Transition Filter.
Parameter(s)	<filter> {numeric, range 0 to 65535}
Setting example	:STAT:OPER:PTR 64
	Sets bit 6 of the Questionable Status Positive Transition Filter to 1.
Response	{numeric, format NR1, range 0 to 65535}
Query example	:STAT:QUES:PTR?
Response example	64
	Bit 6 of the Questionable Status Positive Transition Filter is set to 1.

:SYSTem:ERRor?

Explanation	Queries the error content.
Response	<error number>, <error message> <error number> {numeric, format NR1, range -32768 to +32767} <error message> format SRD For details ☞ "9. Error Messages"
Query example	:SYST:ERR?
Response example	0,"No error" There is no error.
Note	The error read is the oldest one in the error queue. Once the content of an error has been read, that error is removed from the error queue. The error queue can hold up to 16 errors. If this number is exceeded, the 16th error message changes to "Queue overflow" and subsequent errors are discarded.

:SYSTem:KLOCk {ON|OFF|1|0}

:SYSTem:KLOCk?

Explanation	Sets/queries the front panel key lock function.
Parameter(s)	{ON|1} Enables key lock (disables key operation). {OFF|0} Disables key lock (enables key operation).
Setting example	:SYST:KLOC 1 Enables key lock (disables key operation).
Response	{1|0}
Query example	:SYST:KLOC?
Response example	1 Key lock is enabled (key operation is disabled).

:SYSTem:RST

Explanation	Initializes settings. Unlike the *RST command, this command also clears the contents of configuration memories 1 to 9. For details ☞ LI5645 / LI5650 Instruction Manual (Operations) "Table 3-1 Settings and default values"
Parameter(s)	None
Setting example	:SYST:RST Initializes settings.

:TRIGger:DELay <delay time>

:TRIGger:DELay?

Explanation	Sets/queries the trigger delay time. Trigger delay time: Time that elapses between trigger execution and recording of data or starting of the internal timer.
Parameter(s)	{numeric, range 0 to 100, unit s, resolution 640ns } The suffix M (10^{-3}) and unit S may be used. Example: 200MS (＝0.200).
Setting example	:TRIG:DEL 20E-3 Sets the trigger delay time to 20 ms.
Response	{numeric, format NR3}
Query example	:TRIG:DEL?
Response example	2.000000E-02 Trigger delay time is 20 ms.

:TRIGger[:IMMediate]

Explanation	When the measurement data buffer is enabled, executes a trigger and records data in the measurement buffer. When the internal timer is disabled, measurement data is recorded only once. When the internal timer is enabled, starts recording measurement data according to the internal timer. Enable the measurement data buffer ☞ :DATA:FEED:CONTrol command Set the internal timer ☞ :DATA:TIMer command Before using triggers, the awaiting trigger state must be set with the :INITiate[:IMMediate] command. An error will result if the awaiting trigger state has not been set.
Setting example	:TRIG Executes a trigger.

:TRIGger:SOURce {MANual|EXTernal|BUS}

:TRIGger:SOURce?

Explanation	Sets/queries the trigger source.
Parameter(s)	MANual Front panel ☐ / TRIG key EXTernal Rear panel TRIG IN signal BUS Remote control *TRG or :TRIGger[:IMMediate] command, or the GET message
Setting example	:TRIG:SOUR EXT Sets the trigger source to EXT.
Response	{MAN|EXT|BUS}
Query example	:TRIG:SOUR?
Response example	EXT Trigger source is EXT (TRIG IN).
Note	The ☐ / TRIG key is enabled only when in the remote state.

RS-232/LAN dedicated commands

The three commands shown on this page will provide control functions that can be realized in GPIB and USBTMC. An error results if these commands are used with GPIB or USBTMC.

:SYSTem:LOCal

Explanation	Switches to the local state. While in local state, operation can be controlled from the panel. Local Lockout is cancelled.
Parameter(s)	None
Setting example	:SYST:LOC Switches to the local state.
Note	Sending any command or query other than this one using RS-232 or LAN RS-232 causes the LI5645 / LI5650 to enter the remote state. When key lock mode is enabled, operation can be controlled from the panel.

:SYSTem:REMote

Explanation	Switches operation to remote state. While in remote state, operation cannot be controlled from the panel. However, as long as Local Lockout is disabled, only the CLR / LOCAL key can be used.
Parameter(s)	None
Setting example	:SYST:REM Switches to the remote state.
Note	This command does not affect the enabled/disabled status of Local Lockout.

:SYSTem:RWLock

Explanation	Switches to remote state with Local Lockout. During Local Lockout, operation cannot be returned to the local state by pressing the CLR / LOCAL key.
Parameter(s)	None
Setting example	:SYST:RWL Switches to remote state with Local Lockout.
Note	When cancelling Local Lockout, use the :SYSTem:LOCal command to enter local state.

6. Status system

6.1 Status system outline

The status system of the LI5645 / LI5650 is shown in Fig. 6-1.

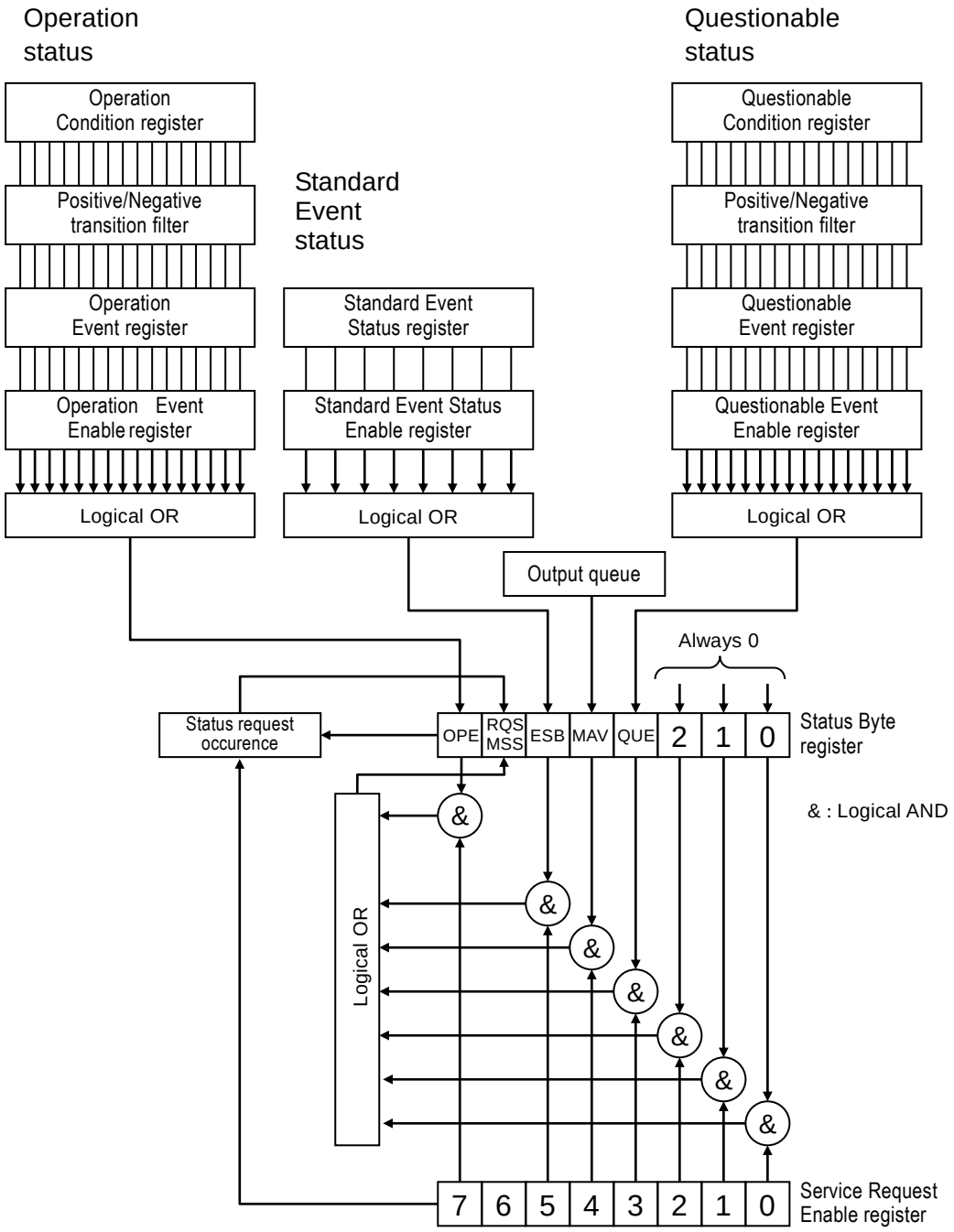

Fig. 6-1 Status system

6.2 Status Byte

Definition of the Status Byte register is shown in Table 6-1. The status byte can be read by serial polling. At this time, bit 6 is RQS (Request Service).

Table 6-1 Status Byte register definition

Bit		Weight	Condition for setting 1	Condition for setting 0
OPE	7	128	When any of the effective bits in the Operation Status Event register becomes 1	・ Upon receiving Device Clear ・ After the Status Byte is read
RQS / MSS	6	64	When SRQ is send.	・ Upon receiving Device Clear ・ RQS is cleared when the Status Byte is read by serial polling. ・ MSS is cleared when the original summary bits are all cleared to 0.
ESB	5	32	When any of the effective bits in the Standard Event Status register becomes 1	When all of the effective bits in the Standard Event Status register become 0
MAV	4	16	When the response to a query has been prepared and is ready for output	When all responses have been output and there are no further responses to output
QUE	3	8	When any of the effective bits in the Questionable Event register becomes 1	When all of the effective bits in the Questionable Event register become 0
—	2	4	—	Always 0 (not used)
—	1	2	—	Always 0 (not used)
—	0	1	—	Always 0 (not used)

■ Related commands/queries

*STB?

Queries content of the Status Byte register.

Bit 6 is MSS (Master Summary Status).

*SRE, *SRE?

Sets and queries the Service Request Enable register.

The register is cleared to 0 immediately after turning on the power. Set 0 to clear to 0. The Status Byte Register is enabled when 1 is set to the Service Request Enable register, and a Service Request is issued when one of the effective bits is set to 1.

The setting and response message parameter for the respective registers is the value that is the sum of weights of bits that are 1.

■ Status verification when querying

Ordinarily, a correct response can be obtained by receiving a response message after sending a query. There is no need to check the MAV bit of the Status Byte. If processing performed includes checking of the MAV bit, read the response message after verifying that the MAV bit of the Status Byte is 1 by serial polling, and then continue with the next operation after verifying that the MAV bit has changed to 0.

6.3 Standard Event status

The structure of the Standard Event status is shown in Fig. 6-2. Details on the status are shown in Table 6-2. When a bit in the Standard Event Status Enable register is set to 1, the corresponding bit in the Standard Event Status register becomes effective, and when any effective bit in that register becomes 1, the ESB bit in the Status Byte register is set to 1.

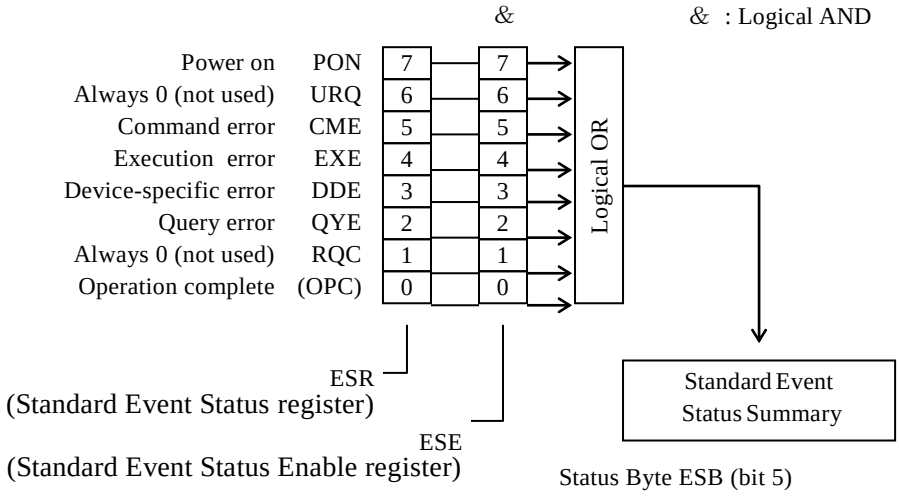

Fig. 6-2 Standard Event status structure

Table 6-2 Content of the Standard Event Status register.

Bit		Weight	Content
PON	7	128	Power on 1 is set when the power is turned on. Once this register has been cleared to 0 by reading it, it remains 0 after the power is turned back on.
URQ	6	64	User request Always 0 (not used)
CME	5	32	Command error Set to 1 when there is a syntax error in the program code.
EXE	4	16	Execution error Set to 1 if a parameter is out of range or if there is a inconsistency in settings.
DDE	3	8	Device-specific error Set to 1 when the error queue overflows.
QYE	2	4	Query error Set to 1 when an attempt is made to read the output buffer used for storing response messages while the buffer is empty, or when data is lost from the buffer used for storing response messages.
RQC	1	2	Request control Always 0 (not used)
OPC	0	1	Operation complete Set to 1 when processing of all commands has been completed up to the *OPC command.

■ Related commands/queries

*ESR?

Queries content of the Standard Event Status register.

Querying the register clears it to 0. The register can also be cleared with the *CLS command.

The register is cleared to 0 immediately after turning on the power. However, the PON bit is set to 1.

*ESE, *ESE?

Sets/queries the Standard Event Status Enable register.

Set 0 to to this register to clear it to 0.

There are no other commands to clear it.

The register is cleared to 0 immediately after turning on the power.

The setting and response message parameter for the respective registers is the value that is the sum of weights of bits that are 1.

6.4 Operation status

The structure of the Operation status is shown in Fig. 6-3.

The Operation Condition register indicates the status of the LI5645 / LI5650 as shown in Table 6-3. The transition filter detects changes in condition and generates events. Generation of events requires setting the transition filter. Events generated are maintained by the Operation Event register. When a bit in the Operation Event Enable register is set to 1, the bits in the Operation Event register become effective, and when any effective bit in that register becomes 1, the OPE bit in the Status Byte is set to 1.

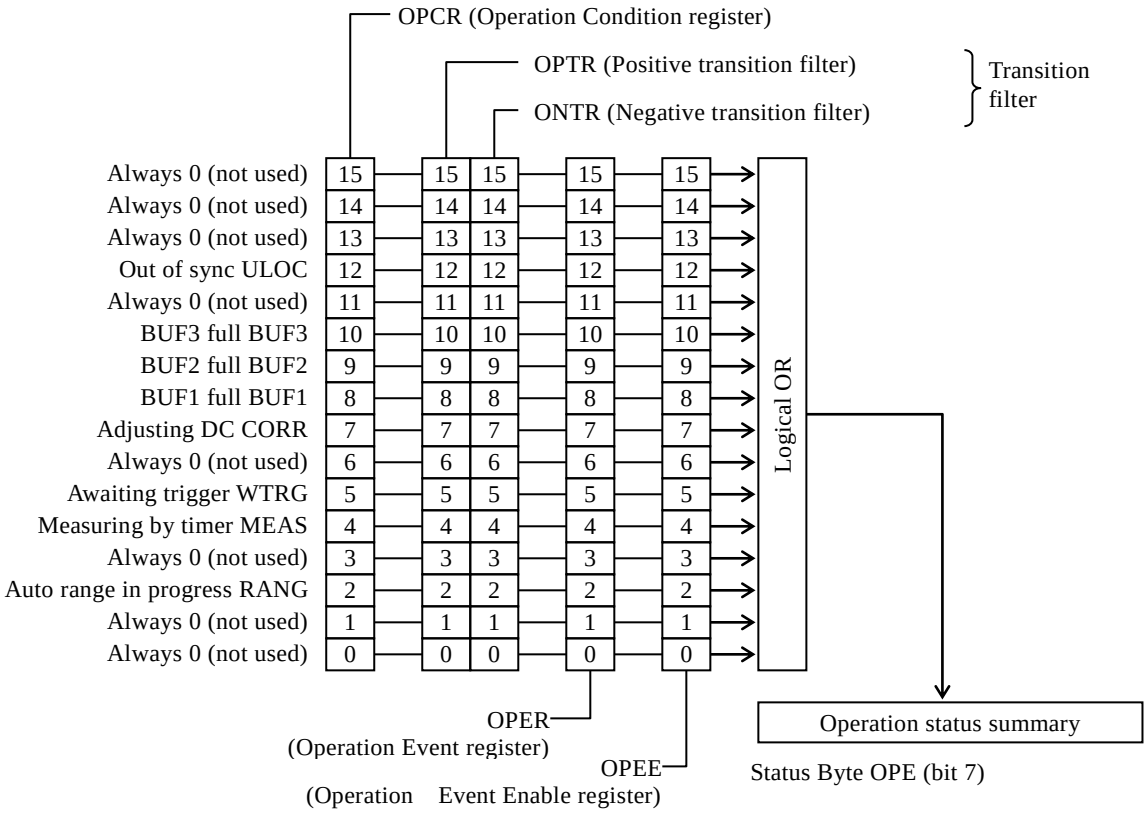

Fig. 6-3 Operation Status structure

Table 6-3 Operation Condition register, Event register content

Bit		Weight	Condition register content (1 in specified state)
—	15	32768	Always 0 (not used)
—	14	16384	Always 0 (not used)
—	13	8192	Always 0 (not used)
ULOC	12	4096	Not in sync with external reference frequency (10 MHz)
—	11	2048	Always 0 (not used)
BUF3	10	1024	BUF3 full
BUF2	9	512	BUF2 full
BUF1	8	256	BUF1 full
CORR	7	128	DC input offset auto adjust active
—	6	64	Always 0 (not used)
WTRG	5	32	Awaiting trigger
MEAS	4	16	Measuring by timer
—	3	8	Always 0 (not used)
RANG	2	4	In adjusting the range and dynamic reserve by one-time automatic range selectin function.
—	1	2	Always 0 (not used)
—	0	1	Always 0 (not used)

■ Related commands/queries

:STATus:OPERation:CONDition?

Queries the Operation Condition register.

Querying this register does not clear its contents to 0.

It constantly indicates the device status.

:STATus:OPERation[:EVENt]?

Queries the Operation Event register.

Querying the event register clears it to 0.

The event register can also be cleared with the *CLS command.

The register is cleared to 0 immediately after turning on the power.

:STATus:OPERation:ENABle, STATus:OPERation:ENABle?

Set/queries the Operation Event Enable register.

Set 0 to to this register to clear it to 0. There are no other commands to clear it.

The register is cleared to 0 immediately after turning on the power.

:STATus:OPERation:NTR, STATus:OPERation:NTR?

:STATus:OPERation:PTR, STATus:OPERation:PTR?

Sets/queries the Operation Status Transition Filter.

The relationship between transition filter settings and transition of the event register is shown in Table 6-4.

Table 6-4 Operation Transition Filter and Event register transition

Positive transition filter bit settings	Negative transition filter bit settings	Condition register transition to set Event register to 1
1	0	0 → 1
0	1	1 → 0
1	1	0 → 1 or 1 → 0
0	0	Event register not set to 1.

The setting and response message parameter for the respective registers is the value that is the sum of weights of bits that are 1.

6.5 Questionable Status

The structure of the Questionable Status is shown in Fig. 6-4.

The Questionable Status register indicates abnormal status of the LI5645 / LI5650 as shown in Table 6-4. The transition filter detects changes in condition and generates events. Generation of events requires setting the transition filter. Events generated are maintained by the Questionable Event register. When a bit in the Event Enable register is set to 1, the corresponding bits in the Event register become effective, and when any effective bit in that register becomes 1, the QUE bit in the Status Byte is set to 1.

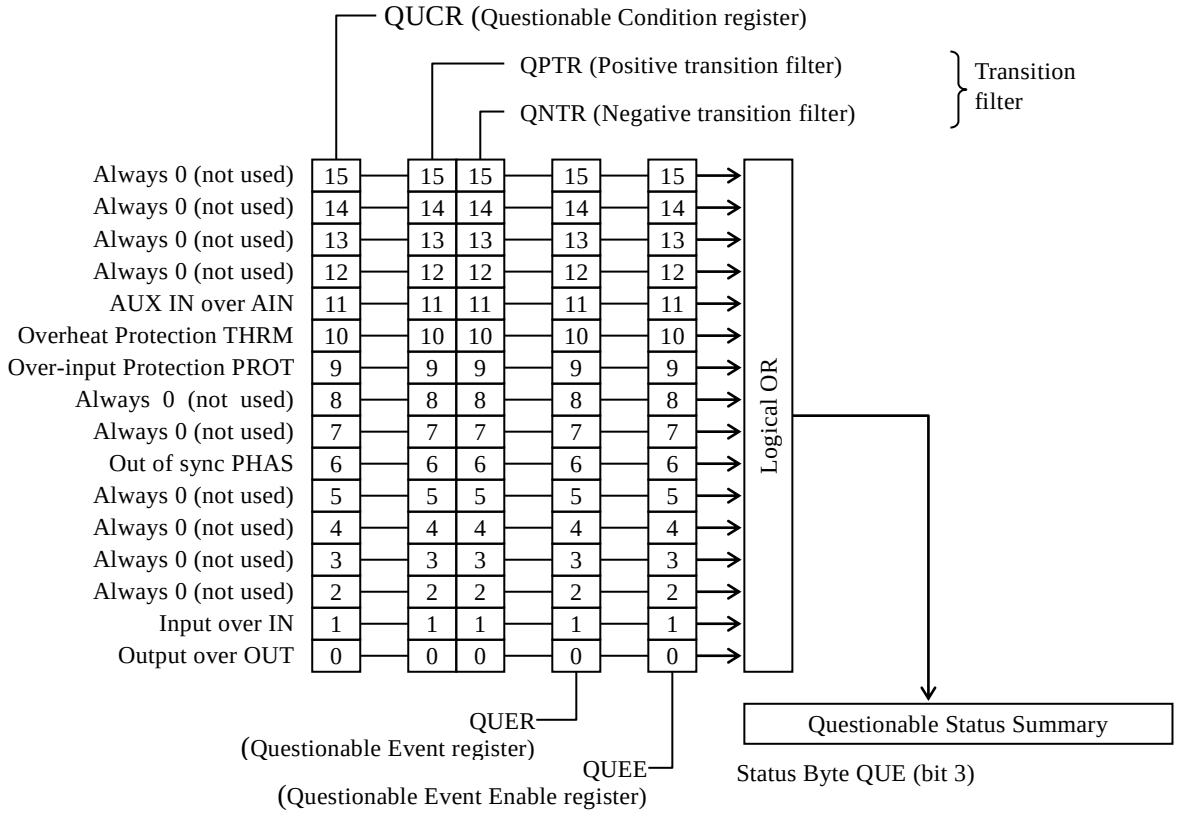

Fig. 6-4 Questionable Status structure

Table 6-5 Questionable Condition register, Event register content

Bit		Weight	Condition register content (1 in specified state)
—	15	32768	Always 0 (not used)
—	14	16384	Always 0 (not used)
—	13	8192	Always 0 (not used)
—	12	4096	Always 0 (not used)
AIN	11	2048	AUX IN 1 or AUX IN 2 is over level Over level status: AUX
THRM	10	1024	Internal overheat condition
PROT	9	512	Protection operating against over-input Over level status: PROTECT
—	8	256	Always 0 (not used)
—	7	128	Always 0 (not used)
PHAS	6	64	Not synchronized with external reference signal or measurement signal input
—	5	32	Always 0 (not used)
—	4	16	Always 0 (not used)
—	3	8	Always 0 (not used)
—	2	4	Always 0 (not used)
IN	1	2	Analog signal is over level in the previous PSD stage. Over level status: INPUT
OUT	0	1	Over level in DC gain or processing after the PSD stage. Over level status: OUTPUT

■ Related commands/queries

:STATus:QUEStionable:CONDition?

Queries the Questionable Condition register.

Querying this register does not clear its contents to 0.

It constantly indicates the device status.

:STATus:QUEStionable[:EVENt]?

Queries the Questionable Event register.

Querying the event register clears it to 0.

The event register can also be cleared with the *CLS command.

The register is cleared to 0 immediately after turning on the power.

:STATus:QUEStionable:ENABle, STATus:QUEStionable:ENABle?

Set/queries the Questionable Event Enable register.

Set 0 to to this register to clear it to 0. There are no other commands to clear it.

The register is cleared to 0 immediately after turning on the power.

:STATus:QUEStionable:NTR, STATus:QUEStionable:NTR?

:STATus:QUEStionable:PTR, STATus:QUEStionable:PTR?

Sets/queries the Questionable Event Status Transition Filter.

The relationship between transition filter settings and transition of the event register is shown in Table 6-6.

Table 6-6 Questionable Transition Filter and Event register transition

Positive transition filter bit settings	Negative transition filter bit settings	Condition register transition to set Event register to 1
1	0	0 → 1
0	1	1 → 0
1	1	0 → 1 or 1 → 0
0	0	Event register not set to 1.

The setting and response message parameter for the respective registers is the value that is the sum of weights of bits that are 1.

7. Trigger system

The LI5645 / LI5650 trigger system is shown below.

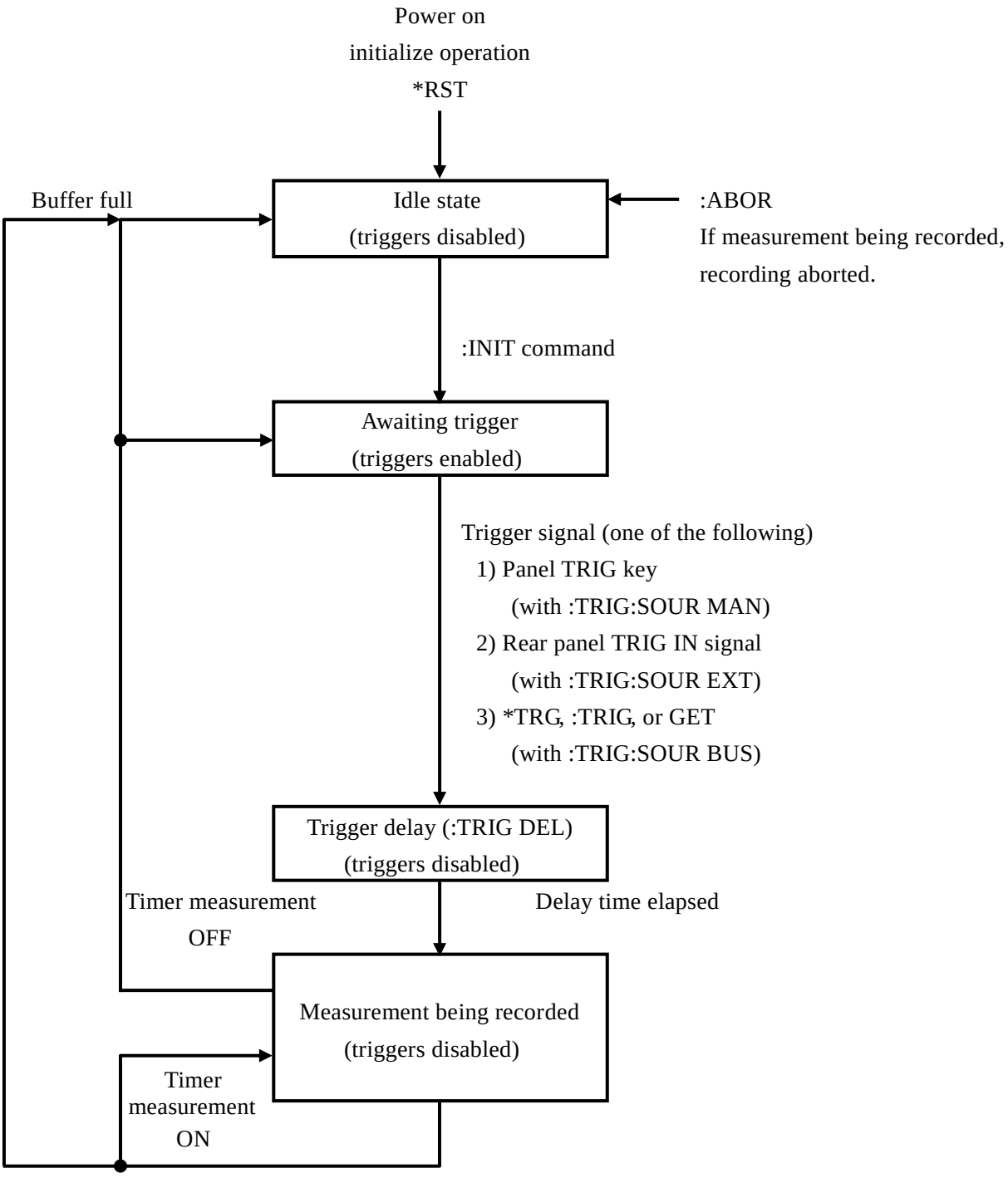

Fig. 7-1 Trigger system

○ The following operations cannot be performed during measurement data recording (while awaiting trigger).

- Setting the output signal ☞ :CALCulate1:FORMat
  :CALCulate2:FORMat
  :CALCulate3:FORMat
  :CALCulate4:FORMat
- Changing the recording buffer ☞ :DATA:FEED:CONTrol
- Change the data to be recorded ☞ :DATA:FEED
- Changing the number of recording points ☞ :DATA:POINts
- Clearing the measurement data buffer ☞ :DATA:DELete
  :DATA:DELete:ALL
- Changing the timer ☞ :DATA:TIMer
  :DATA:TIMer:STATe
- Changing the trigger source ☞ :TRIGger:SOURce
- Changing the trigger delay time ☞ :TRIGger:DELay
- Changing the detection mode ☞ [:SENSe]:DETector[:FUNCtion]

○ The following events/operations change the mode from the awaiting trigger state to the idle state.

- Power on
- Executing the :ABORt command
- Filling up the buffer
- Switching to local state
- Reset operation ☞ *RST
  :SYSTem:RST
- Operating on configuration memory ☞ *RCL
  *SAV
  :MEMory:STATe:DELete
- Executing AUTO or AUTO ONCE ☞ :CALCulate1:OFFSet:AUTO:ONCE
  :CALCulate2:OFFSet:AUTO:ONCE
  :CALCulate3:OFFSet:AUTO:ONCE
  :CALCulate4:OFFSet:AUTO:ONCE
  :INPut[1]:OFFSet:AUTO
  :INPut[1]:OFFSet:AUTO:ONCE
  [:SENSe]:AUTO:ONCE
  [:SENSe]:CURRent[1]:AC:RANGe:AUTO
  [:SENSe]:CURRent[1]:AC:RANGe:AUTO:ONCE
  [:SENSe]:FILTer[1][:LPASs]:AUTO:ONCE
  [:SENSe]:PHASe[1]:AUTO:ONCE
  [:SENSe]:PHASe2:AUTO:ONCE
  [:SENSe]:VOLTage[1]:AC:RANGe:AUTO
  [:SENSe]:VOLTage[1]:AC:RANGe:AUTO:ONCE

○ The following operations clear the buffer.

・Change the data to be recorded	☞	:DATA:FEED
・Changing the number of recording points	☞	:DATA:POINts
・Reset operation	☞	*RST
		:SYSTem:RST
・Clearing the measurement data buffer	☞	:DATA:DELete
		:DATA:DELete:ALL

With BUF3 only, data is deleted from the measurement data buffer when it is read.

8. Data acquisition using the measurement data buffers

Multiple sample points can be stored in the measurement data buffers as a measurement data set, and then the buffer contents can be read later.
The following schematically illustrates use of the measurement data buffer for measurement.

Example 1 Reading all measurement data out of BUF1 at once after recording it into the buffer at arbitrary timing.

```
Send (":ABOR")
        ' Any recording currently in progress is aborted.
Send (":DATA:FEED    BUF1, 7")
        ' Set the measurement data set for recording.
Send (":DATA:POIN    BUF1, 100")
        ' Set capacity of the measurement data buffer.
        ' At this time, the contents of the specified buffer are cleared.
Send (":DATA:FEED:CONT    BUF1, ALW")
        ' Enable recording into the specified measurement data buffer.
Send (":DATA:TIM:STAT    OFF")
        ' Disable the internal timer.
Send (":TRIG:SOUR    BUS")
        ' Set the trigger source to remote control.
        ' Other trigger sources can also be used.
        ' If necessary, specify a trigger delay time.    ☞  :TRIG:DEL command
Send (":INIT")
        ' Transition to the awaiting trigger state.
Send (":TRIG")
        ' Apply the trigger to repeatedly record measurement data.
        ' If the measurement data buffer becomes full during recording, the trigger system enters
        the idle state and further triggers are not accepted.
Send (":STAT:OPER:COND?")
Receive (OPCR)
        ' When the trigger source is other than BUS, completion of measurement can
        ' be determined from the operation status full flag.
        ' SRQ can also be used to generate an interrupt when the buffer becomes full.
Send (":FORM    ASC")
        ' Set the data transfer format to be used for reading out data.
Send (":DATA:DATA?    BUF1, 100, 0")
        ' Request transfer of data from the measurement data buffer.
        ' It is also possible to check the number of sample
        ' points recorded in the measurement data buffer.    ☞  :DATA:COUN command
Receive (STAT_1, DATA1_1, DATA2_1, STAT_2, DATA1_2, DATA2_2, …)
        ' Reads out a block of measurement data starting a the specified starting position.
```

Example 2　Reading measurement data from BUF3 in parallel with recording.

```
Send (":ABOR")
        ' Any recording currently in progress is aborted.
Send (":DATA:FEED    BUF3, 3")
        ' Set the measurement data set for recording.
Send (":DATA:POIN    BUF3, 100")
        ' Set capacity of the measurement data buffer.
        ' At this time, the contents of the specified buffer are cleared.
Send (":DATA:FEED:CONT    BUF3, ALW")
        ' Enable recording into the specified measurement data buffer.
Send (":DATA:TIM    1E-3")
        ' Set the interval of the internal timer.
Send (":DATA:TIM:STAT    ON")
        ' Enable the internal timer.
Send (":TRIG:SOUR    EXT")
        ' Set the trigger source to the external input signal.
        ' Other trigger sources can also be used.
        ' If necessary, specify a trigger delay time.  ☞  :TRIG:DEL command
Send (":INIT")
        ' Transition to the awaiting trigger state.
        ' Upon trigger application, measurement data recording starts at equal time intervals.
Send (":FORM    ASC")
        ' Set the data transfer format.
Send (":DATA:DATA?    BUF3, 2")
        ' Request transfer of data from the measurement data buffer.

Receive (STAT_1, DATA1_1, STAT_2, DATA1_2)
        ' Repeat requesting and receiving measurement data.
        ' If readout is faster than recording, the buffer will never become full and recording can
        ' continue indefinitely.
        ' If readout falls behind, further recording is not possible once the buffer becomes full.
Send (":DATA:FEED:CONT    BUF3, NEV")
        ' Once the required data has been obtained, stop recording to the buffer to
        ' avoid degradation of device performance due to unnecessary operation.
```

Example 3　Record and read out data in parallel using BUF1 and BUF2 in alternation.

```
Send (":ABOR")
        ' Any recording currently in progress is aborted.
Send (":DATA:FEED    BUF1, 6")
Send (":DATA:FEED    BUF2, 6")
        ' Set the measurement data set to be recorded to the respective buffers.
Send (":TRIG:SOUR    EXT")                    ' Set the trigger source.
Send (":FORM    ASC")
        ' Set the data transfer format to be used for reading out data.
Send (":DATA:POIN    BUF1, 256")              ' Clear BUF1.
Send (":DATA:FEED:CONT    BUF1, ALW")         ' Direct recording to BUF1.
Send (":INIT")    ' Transition to the awaiting trigger state.
        ' Thereafter, apply as many triggers as needed to obtains samples corresponding to the
        buffer capacity.

   Send (":STAT:OPER:COND?")
   Receive (OPCR)
           ' Monitor the BUF1 full flag for completion of recording.

   Send (":DATA:POIN    BUF2, 256")          ' Clear BUF2.
   Send (":DATA:FEED:CONT    BUF2, ALW")     ' Direct recording to BUF2.
   Send (":INIT")    ' Transition to the awaiting trigger state.
           ' Thereafter, apply the trigger in correspondence with buffer capacity while reading out
           data in parallel.
   Send (":DATA:DATA?    BUF1, 256, 0")
   Receive (DATA1_1, DATA2_1, DATA1_2, DATA2_2, DATA1_3, DATA2_3 …)
           ' In parallel with recording data to BUF2, read out data recorded in BUF1.
   Send (":STAT:OPER:COND?")
   Receive (OPCR)
           ' Monitor the BUF2 full flag for completion of recording.

   Send (":DATA:POIN    BUF1, 256")          ' Clear BUF1.
   Send (":DATA:FEED:CONT    BUF1, ALW")     ' Direct recording to BUF1.
   Send (":INIT")    ' Transition to the awaiting trigger state.
           ' Thereafter, apply the trigger in correspondence with buffer length while reading out
           data in parallel.
   Send (":DATA:DATA?    BUF2, 256, 0")
   Receive (DATA1_1, DATA2_1, DATA1_2, DATA2_2, DATA1_3, DATA2_3 …)
           ' In parallel with recording data to BUF1, read out data recorded in BUF2.

   ' Repeat recording and reading out data as much as necessary.
```

9. Error Messages

This section shows the content of the main errors that can occur during remote control.

Table 9-1 Error messages 1/2

Error number	Error message	Error content
0	No error	———
–102	Syntax error	Received an unrecognizable command or data.
–103	Invalid separator	Problem with command separators.
–104	Data type error	Problem with the parameter format.
–108	Parameter not allowed	Too many parameters, or there is a parameter where one is not allowed.
–109	Missing parameter	Too few parameters.
–110	Command header error	Command header contains an error (no detailed classification).
–113	Undefined header	Command header is undefined.
–115	Unexpected number of parameters	Too many parameters.
–120	Numeric data error	Numeric data contains an error (no detailed classification).
–123	Exponent too large	Specified exponent is too large. (Example :SOURe:VOLTage 1E+000001)
–124	Too many digits	Too many digits (more than 255 digits).
–130	Suffix error	Suffix (multiplier, unit) contains an error (no detailed classification).
–134	Suffix too long	Too many auxiliary unit characters or unit characters (more than 7).
–140	Character data error	Character data contains an error (no detailed classification).
–144	Character data too long	Character data is too long.
–200	Execution error	Command could not be executed (no detailed classification). ・Set a parameter that cannot be set while in the trigger idle state. ・Execute ":ABORt" while in the trigger idle state. ・Set a value that exceeds 5 words to the data set. ・Any of the following states were present during ":INIT" execution. Other than the trigger idle state Continuous automatic setting state Situation where no buffer has been specified for recording Situation in which the specified buffer is full ・Upon specifying a configuration memory number outside the range 1 to 9 with "*SAV", etc., while saving configuration memory, changing a name, or using the clear command. ・When a command that only works with USB or GPIB is used with LAN or RS-232.
–206	Auto-once failed due to unlock	When the UNLOCK state results upon one-time automatic setting.
–207	X,Y out of range	When X or Y measurement values are outside the adjustment range.

Table 9-1 Error messages 2/2

Error number	Error message	Error content
–211	Trigger ignored	Trigger command received, but execution not possible.
–221	Settings conflict	Command execution not possible due to constraints between multiple settings.
–222	Data out of range	Data out of valid range.
–224	Illegal parameter value	Parameter is invalid (invalid for reason other than "-104 Data type error"). (Example :SOURe:VOLTage %1)
–310	System error	A device-specific internal error occurred (no detailed classification).
–350	Queue overflow	New errors cannot be saved due to error queue overflow.
–410	Query INTERRUPTED	The following command was received before finishing transmission of all requested responses. A response was interrupted and the output buffer cleared.
–420	Query UNTERMINATED	A response was requested, but the query received was incomplete and could not be fulfilled. The output buffer was cleared.
–440	Query UNTERMINATED after indefinite response	A character string included a query following "*IDN?". ("*IDN?" must be the final query in the received character string.)

Remote control errors are recorded in the error queue and can be read out in sequence by :SYSTem:ERRor? starting with the oldest. Once all errors have been read out, 0,"No error" is returned if the query is sent again. The error queue can be cleared with the *CLS command.
Data remaining in the input buffer or output buffer at the time a problem occurs can be cleared using a device clear interface message (DCL, SDC). If the interface being used does not support the device clear function, use the corresponding substitute function instead.

Under some circumstances, errors other than the above may occur. In such cases, check the error message for a summary.

For operations that can be controlled from the panel, error messages are the same as with panel operation. Refer to the explanations of panel operations related to the various commands and queries. Errors that occur during ordinary measurement are displayed in the same manner during remote control.

10. Embedded Web Site

This section shows the content of the embedded web site. The embedded web site can be used with firmware version 1.50 or later.

10.1 Preparation

It is necessary to enable the LAN interface of the LI5645 / LI5650 to access embedded web pages. When it is enabled, the built-in web server is launched. After launching web server, it is possible to access web pages. Please refer to the section "1.5 LAN outline" for the way to enable the LAN interface.

10.2 Requirements

OS	Windows 7
Web Browser	Microsoft Internet Explorer (version 11 or later)
	Google Chrome
	Mozilla Firefox

10.3 How to access web pages

It is necessary to get the IP address of the LI5645 / LI5650 to access web pages. The way to get the IP address, to confirm on the screen of the LI5645 / LI5650 or to use the discovery tool that is based on LXI discovery.

For example, the IP address of the LI5645 / LI5650 is 192.168.0.2, it is able to access web site to directly input http://192.168.0.2/ to a web browser .

Note : The built-in web server does not support Hyper Text Transfer Protocol Secure (HTTPS).

10.4 About web pages

10.4.1 Navigation Menu

Navigation menu includes "Top Menu" and "Sub Menu". To navigate between a page to other page, click an icon of the menu.

Fig. 10-1 Navigation Menu

10.4.2 Descriptions of Menu

Tha following table shows the relation of menu icons to the feture.

Table 10-1 Menu Icons

Top Menu	Sub Menu	Feature
(Home)	None	Transition to "Welcome Page"
(App)	(Remote Control)	Transition to "Remote Control" page that provides the front panel control of the LI5645 / LI5650.
	(Logging)	Transition to "Logging" page that provides the feature for logging measurement data.
(Configuration)	(LAN Configuration)	Transition to "LAN configuration" page, you can change the LAN settings at this page.
	(Security)	Transition to "Security" page, you can change password at this page.
	(Update)	Transition to "Update" page that provides the feature to update the LI5645 / LI5650.
(Help)	(Glossary)	Transition to "Glossary" page that shows glossaries about LXI.

10.4.3 Welcome Page

This page is home page. This page shows the information about the LI5645 / LI5650, e.g. serial number, LAN settings.

The following table shows the parameters of this page.

Table 10-2 List of Parameters at Welcome Page

Parameter	Description
Manufacturer	This parameter indicates the manufacturer name.
Instrument Model	This parameter indicates the model name and the description.
Serial Number	This parameter indicates the serial number.
Firmware Revision	This parameter indicates the firmware revision.
Current Time	This parameter indicates the current date and time. Notation of date and time depends on your web browser.
Current Source of Time	This parameter indicates the source of date and time.
Description	This parameter indicates the service name for mDNS (multicast Domain Name System) and DNS-SD (DNS Service Discovery).
LXI Extended Functions	This parameter indicates the LXI Extended Functions that are supported by the LI5645 / LI5650. If there is no supported function, it will be blank.
LXI Version	This parameter indicates the LXI version that is supported by the LI5645 / LI5650.
Host Name	This parameter indicates the host name. It is used to be access to the LI5645 / LI5650 without an IP address.
MAC Address	This parameter indicates the MAC address.
TCP/IP Address	This parameter indicates the IP address.
LXI Address String	This parameter indifactes the resource name to access by using VISA.
Instrument Identification	"On" and "Off" buttons are used to turn on and off the identificate dialogue that is displayed on the LI 5645 / LI 5650.

The following figure is shows the image that the identification dialogue is enable.

Fig. 10-2 Identification dialogue

10.4.4 Remote Control

You can control the LI5645 / LI5650 by using this page.

By clicking Capture “START” and “STOP” button, it is possible to toggle betweeen the start and stop capturing a screen shot and display refreshing.

By clicking Refresh Cycle “1.0s” or “2.0s” buttton, it is possible to change the refresh cycle.

For explanation about other buttons, please refer to the LI 5645 / LI 5650 Instruction Manual (Operations).

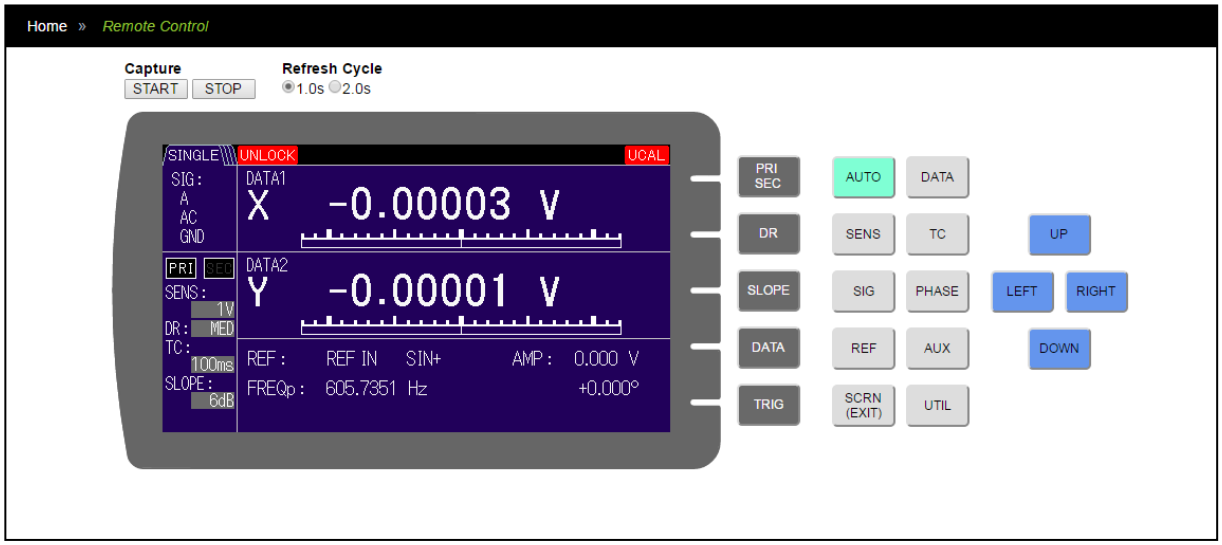

Fig. 10-3 Control Panel

■ Note

When the page loading is completed, the screen captureing is automatically started.

If the processing load of the LI5645 / LI5650 is increased, the frequency of refreshing is decreased or stop refreshing.

A remote command is executed when accessing this page, refreshing of the display will be stopped.

10.4.5 Logging

This page provides to obtain measurement data form the LI5645 / LI5650.

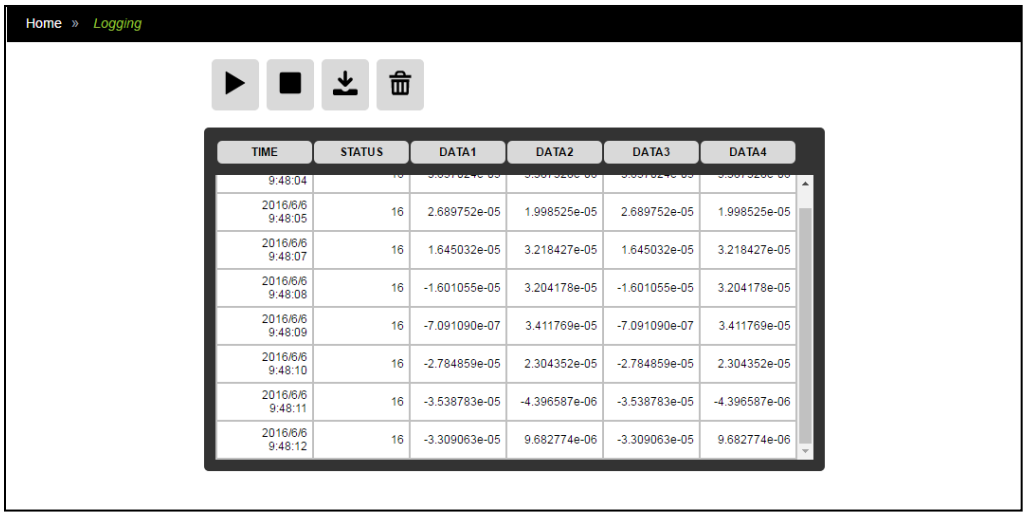

Fig. 10-4 Logging

Table 10-3 List of the Buttons at Logging Page

Button	Description
▶ (Play)	Start measurement.
■ (Stop)	Stop measurement.
(download)	Download measurement data in CSV format.
(Clear)	Clear the data in the table.

■ Note

The refreshing cycle is 1 second. If the processing load of the LI5645 / LI5650 is increased, the cycle is not guaranteed.

The measured values are stored in the temporary storage of the web browser. Then the maximum number of the measured values that can be stored is 1024. If the window is closed, screen transition or reloading occurs, the stored data will be deleted.

The accessing this or other page at the same time or the executing a remote command causes to stop logging.

10.4.6 LAN Configuration

You can confirm and change the LAN settings of the LI5645 / LI5650.

To change setting is as follows:

- Click "Modify" button to change the forms to writeable.
- Enter new parameter to the form.
- Click "Submit" button.

And clicking “Reset” button, the settings are revert to the values before change.

The way to revert the settings to the factory default, see the section “1.5.2 LI5645 / LI5650 preparation” and reset by the {LAN Reset screen}.

The following table are the values that are shown in this page.

Table 10-4 List of the Parameters at LAN Configuration

Items	Description	Note
Host Name	This parameter is used to access the LI5645 / LI5650 without an IP address by using mDNS and DNS-SD. If a hostname conflict occurs, a new host name, e.g. <Host Name>-1. <Host Name>-2, …, is self-resolved by the LI5645 / LI5650. Up to 63 characters including alphabet and numeric characters and hyphens can be entered.	If this parameter has been changed other than the factory default value, this parameter can not be reverted to the factory default by the {LAN Reset Screen}. In this case, this parameter blank and clicking “Submit” button, it may be reverted to the default value.
Domain	This parameter is not to be used. Please set “1”.	
Description	This parameter is used as a service name for mDNS and DNS-SD. If a service name conflict occurs, a new service name, e.g. <Description>(1), <Description>(2), …, is self-resolved by the LI5645 / LI5650. Up to 63 characters including alphabet and numeric characters, hyphens and spaces can be entered.	If this parameter has been changed other than the factory default value, this parameter can not be reverted to the factory default by the {LAN Reset Screen}. In this case, this parameter blank and clicking “Submit” button, it may be reverted to the default value.
TCP/IP Mode	This parameter is used to select the method for IP address assignment. Auto: Using DHCP and APIPA (Automatic Private IP Addresssing). Manual: Using the static IP address set by the user.	
IP Address	This parameter is the static IP address.	

Subnet Mask	This parameter is the subnet mask.	
Default Gateway	This parameter is the default gatway.	
DNS Server	This parameter is the address for a DNS server	
Link Speed	This parameter shows the link speed. It is not changed from "Auto-Negotiation" in the LI 5645 / LI 5650.	This parameter is shown by clicking the text written as "Show Addvanced items".
ICMP Ping	This parameter shows whether the ICMP Ping Responder is enabled or not. It is not changed from "Enable" in the LI5645 / LI5650.	This parameter is shown by clicking the text written as "Show Addvanced items".
mDNS Discovery	This parameter shows whether the mDNS/DNS-SD is enabled or not. It is not changed from "Enable" in the LI 5645 / LI5650.	This parameter is shown by clicking the text written as "Show Addvanced items".
Dynamic DNS updates	This parameter shows whether the Dynamic DNS Updating is enabled or not. It is not changed from "Enable" in the LI 5645 / LI5650.	This parameter is shown by clicking the text written as "Show Addvanced items".
VXI-11 Discovery	This parameter shows whether the VXI-11 Discovery is enabled or not. It is not changed from "Enable" in the LI 5645 / LI5650.	This parameter is shown by clicking the text written as "Show Addvanced items".

10.4.7 Security

You can enable/disable web page protection and change password. The pages to be protected are “Remote Control”, “LAN Configuration”, “Update” and this page.

If you want to enable protection, enter the letters on the “New Password” and “Confirm Password” form and press “Submit” button. And if you want to enable disable protection, press "Submit" button with leaving the form "New Password" and "Confirm Password" blank.

The factory default password is blank. In other words, web page protection is disabled.

The following dialogue image is shown when you access web page that is protected. In the dialogue you should input "user" to "User Name:" field.

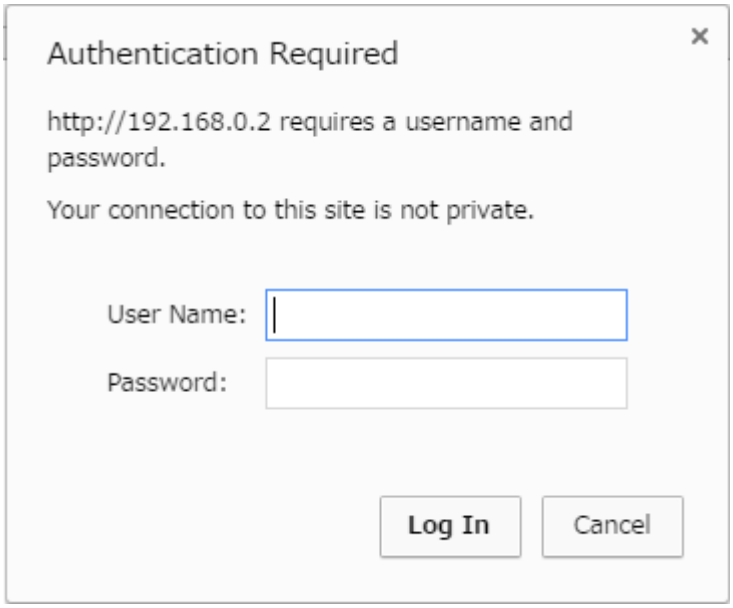

Fig. 10-5 Authentication Dialogue

Passwrod reset can be done with the following procedure:

UTIL → [INTERFACE>] → [LAN>] → [RESET>] → [Exec]

Note : If you reset password with the above procesure, also reset other settings, e.g, IP address.

10.4.8 Update

You can update the LI5645 / LI5650.

Please refer to the manual that comes with the firmware updater of the LI5645 / LI5650.

10.4.9 Glossary

This page contains the glossary about LXI.

Notes

- No copying or reproduction of this instruction manual, in part or in whole, is permitted without consent.
- The content of this instruction manual is subject to change without notice in the future.
- Although we commit our best efforts to provide correct information in this manual, we assume no responsibility for any damage resulting from the contents.
  If have any questions or if you spot any errors or find any description lacking in this manual, contact NF Corporation or one of our representatives.

LI 5645 / LI 5650 INSTRUCTION MANUAL (Remote Control)

NF Corporation
3-20 Tsunashima Higashi 6-chome, Kohoku-ku. Yokohama-shi 223-8508, Japan
Phone +81-45-545-8111
http://www.nfcorp.co.jp/

ⓒ Copyright 2016-2018, **NF Corporation**

http://www.nfcorp.co.jp/

NF Corporation
6-3-20, Tsunashima Higashi, Kohoku-ku, Yokohama 223-8508 JAPAN