Resonance characteristics of piezo-electric components

Key words

- Piezo-electric component
- Piezo-electric Device
- Piezo related Unit

Frequency Response Analyzer

FRA5087 / FRA5097

OUTLINE

The impedance measurement of components showing a sharp resonance characteristic such as a piezo-electric element or crystal oscillator, the high density of frequency sweep and a large dynamic range is required.

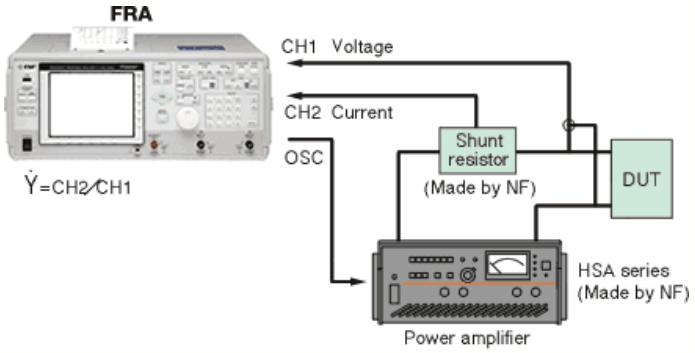

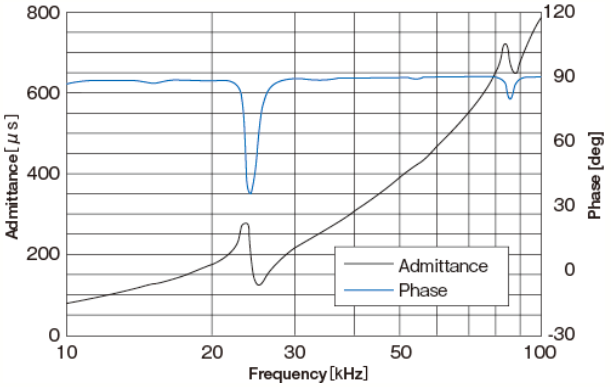

▲ Piezoelectric element admittance characteristics

POINT

- Electrical resonance characteristics of a piezoelectric element used for an actuator can be measured with high precision.
- By automatic high-density sweep function , the measurement in the vicinity of the resonance point can be done automatically in high resolution.
- By ± 0.3 degrees of the high accuracy of phase, the detail observing the characteristics in the vicinity of the resonance can be done.
- In combination with a NF power amplifier, the large amplitude characteristics, like actual operating conditions, can also be measured.

Frequency Response Analyzer FRA5087 / FRA5097

- Frequency range 0.1mHz to 10MHz / 15MHz
- Gain accuracy : ±0.05 dB
  Phase accuracy : ±0.3°
- Dynamic range : 140 dB
- Isolation:250Vrms
- Auto high-density sweep
- Auto ranging